高洁净泵
High purity pumps

WWW.CNDONJOY.COM

国家高新技术企业　浙江省著名商标

www.cndonjoy.com

DONJOY 东正

东正一直致力于重大技术进步，是您值得信赖的事业伙伴！
Donjoy committing to major technological advances, is your reliable business partner!

0.1 自控调节阀+控制器
Automatic control regulating valve
+Control head

0.2 生物制药隔膜阀
Biopharmaceutical diaphragm valve

0.3 高洁净泵
High purity pumps

0.4 防混蝶阀+蝶阀
Mixing proof butterfly valve
+Butterfly valve

0.5 球阀
Ball valve

0.6 截止换向阀+防混阀+罐底阀
Divert seat valve+Mixing proof valve
+Tank bottom valve

0.7 角座阀+截止阀
Angle seat valve+Globe valve

0.8 止回阀+恒压阀+安全阀+减压阀
Check valve+constant pressure valve+safety valve
+air release valve

0.9 清洁技术+取样阀+视镜+照明技术
Clean technology+sample valve+sight glass
+lighting technology

0.10 过滤器+人孔
Filter+man hole cover(manway)

0.11 卫生管件
Sanitary fittings
ASME BPE DIN11852 Bs4825
SMS ISO IDF 3A

注意:
目录技术资料仅供设计参考，
设计更新和技术升级恕不另行通知！

不断革新的技术、日新月异的市场发展和客户需求是当今我们面临的最大挑战。面对这些挑战我们信心十足，因为东正高度专业化的产品和技术创新，是我们未来将以更高、更优的产品来满足不断增长的市场需求。

Technological innovation, rapid development of the market and customer needs are the greatest challenges facing us today. Facing with these challenges we are confident, because of highly professional products and technological innovation, we will meet the growing demand of market and customer with our better and better products.

法律声明:
目录样册版本属东正所有，如有抄袭东正将追究其法律责任和经济赔偿。
东正众多技术设计，都具有专利保护，如有抄袭，东正必将追究法律责任和经济赔偿。

WWW.CNDONJOY.COM

关于东正
About DONJOY

温州滨海经济开发区生产基地
Wenzhou binhai economic development zone production base

东正创立于1993年，注册资金5508万，是一家专注于研发高品质PID过程控制器、阀门定位器、流量控制器，阀门控制单元，高洁净过程控制阀、智能自控阀，高洁净泵、高洁净管材和管道配件。公司高度专业化的产品和技术专注于生物制药、食品饮料、酿酒、精细化工等工业领域。东正众多的创新解决方案，对满足全球，尤其是新兴市场不断增长生物制药和食品饮料行业的需求起到了积极作用。

东正制造的产品母材料、加工技术、焊接技术、表面处理等技术指标均已达到国内外先进水平。且符合ASME BPE、EHEDG、FDA、3A等一系列国际标准和规范要求，先后通过了由德国TÜV机构实施的欧盟承压设备指令(PED-97/23/EC)和(MD-06/42/EC)认证、美国 3A机构实施的3-A卫生标准认证、中国安全阀特种制造设备(TS)许可证和中国质量认证中心CQC ISO9001:2008 质量管理体系认证等多项国际权威认证。

东正凭借先进的技术、优异的品质和完善的售后服务体系，先后被评定为国家高新技术企业，省著名商标、省科技型企业、创新型企业、专利示范企业、研发中心企业，守合同重信用AAA　业等众多荣誉。

Donjoy was built up in 1993, with registered capital RMB 55,08 millions. We focus on developing high quality PID process controller, the valve positioner, the flow controller, the valve control unit, high purity process control valve, intelligent self-control valve, high purity pump, high purity tubing fitting and pipeline accessories. Donjoy's products and technologies are widely used in biopharmaceutical, food, drink, wine fine chemicals and other industrial fields. Donjoy's innovation solutions meet the growing demand of the industry of biopharmaceutical, food and beverage from the whole world, especially the emerging market.

Raw material, processing technology, welding technology, surface treatment from Donjoy have achieved advanced levels of domestic and foreign marekt. Donjoy productions according to ASME BPE, EHEDG, FDA and 3A standard, get certificate of PED-97/23/EC and MD-06/42/EC issued by TUV, 3A issued by 3A organization, TS licence and ISO9001:2008.

Donjoy with advanced technology, excellent quality and perfect after-sales service system, has been assessed as the national high-tech enterprises, the Provincial Famous Trademark, the Trovincial Science and Ttechnology Enterprises, Innovative Enterprises, Patent Model Enterprises, R & D Center, AAA Credit Enterprises.

温州空港经济园区生产基地
Wenzhou airport economic zone production base

占地面积29000m^2，总投资1.2亿元，该基地建成后预计年可实现销售额5亿元。生产基地，新引进ABB工业机器人、日本马扎克5轴加工中心、ABB机器人抛光设备。

Covering an area of 29000 m^2, with total investment after construction is expected to 120 million yuan, the base to achieve sales of 500 million yuan. Production base, introduces new ABB industrial robot, Japan mazar-e-sharif grams of five axis machining center, ABB machine Polishing equipment.

WWW.CNDONJOY.COM

制造与检验
Manufacturing and testing

机器人生产线

DONJOY以科学技术是第一生产力，
也是企业核心竞争力，只有不断投入核心技术研发和创新，
不断追求卓越，精益求精、以先进生产设备，
严格的质量管理体系，精密的生产检测流程，
保证每一款产品优良的性能。

Science and technology constitute a primary productive force, also the core competitive strength of the enterprise. Continuously intensifying the research, development and innovation of core technology, pursuing prominence and keeping improving, ensuring the excellent quality and performance of every single product by advanced production equipment, strict quality control and precise production and inspection procedures.

WWW.CNDONJOY.COM

荣誉与资质
Honor and qualification

3A

东正是美国3A认证组织的成员，3A是一个自愿组织，
致力于维护公共卫生和奶制品产品质量通过独特的行业监管程序的设备，
用于处理乳制品的卫生标准3A认证。东正通过认证产品，
阀门系列(54-02)证书号(1580)，泵系列(02-10)证书号(1579)，
管件(63-03)证书号(1581)等多种规格型号。

PED/97/23/EC & MD/06/42EC

东正通过了TUV NORD欧共体压力设备97/23/EC质量
保证模式H&材料(管件)制造认证。
阀门证书 NO.CE 0036
泵类证书 NO.705201402401-00

FDA177.2600

东正生产的阀门和泵以及流体设备等，与物料接触密封圈全部通过
或符合美国食品和药品管理局和联邦法规第21条即，CRF 21 FDA177.2600和
FDA177.1550认证，其涵盖:
EPDM VITON(FPM) SILICON HNBRPTFE橡胶塑料材料等。

ISO9001/2008

东正通过中国质量认证中心CQC，ISO9001-2008/GB/T19001-2008企业
质量管理体系认证。其证书编号: 00108Q24215R1M/3302

卫生许可证

东正通过了省卫生厅卫生阀门、卫生管件等检验，
且获得了其颁发的证书，其编号: So083。
其许可证为国家出台的生活饮用水卫生监督管理方法证书。

高新技术企业

东正通过多年发展和技术创新已获得了多项国家发明专利，100多项实用
新型专利，现已成为国家高新技术企业。

浙江省著名商标

东正09年获得了温州市著名商标，2012年获得了浙江省著名商标。

DONJOY不但拥有以上认证和荣誉，且被评定为省科技型、创新型、专利示范、研发中心、守合同守信用企业等众多的荣誉证书。

WWW.CNDONJOY.COM

DONJOY众多高洁净泵
DONJOY numerous high purity pumps

LOBE PUMPS TUL
LOBE PUMPS TUR
Self-priming pump
KS centrifugal pump
S-KS centrifugal pump
LOBE PUMPS
Centrifugal pump
Blender

WWW.CNDONJOY.COM

东正泵系列产品，均已获得国家知识产权专利保护；
美国3A和欧盟CE –MD/06/42/EC认证符合EHEDG规范要求。

卫生凸轮泵(转子泵)
Hygienic lobe pump(rotor pump)

高洁净、低噪音、
高压20bar转子泵

应用Applications

◆该泵是一个正位移凸轮转子泵，是根据3A食品卫生标准设计的。
◆该设备按3A标准过程控制,有严格的卫生要求。
◆该泵非常适合于食品加工，化妆品和制药工业中的对粘性和低粘性介质的传输。USA 3A-02-10NO.1579，CE-MD/06-42密封FDA.177.2600认证。

◆The pump is a positive displacement lobe rotor pump designed according to USA 3A standard.
◆The equipment is processed with USA 3A and very strict hygienic.
◆The pump is ideal for the transfer of viscous as well as low-viscous media in the food-processing,Cosmetics and pharmaceutical industries.

材质Materials

◆熔模铸造泵体：AISI 316L(1.4404)/AISI 304(1.4301)
◆垫圈(标准)：EPDM根据FDA 177.2600
◆机械密封圈(标准)：SIC/SIC/EPDM
◆内表面处理：Ra≤0.6μm
◆外表面处理：镜面抛光

◆Investment casting body: AISI 316L(1.4404)/AISI 304(1.4301)
◆Gaskets (standard): EPDM accirdubg to FDA 177.2600
◆Mechanisal seal(Sandard): SIC/SIC/EPDM
◆Internal surface finish: Ra≤0.6μm
◆External surface finish: mirror polish

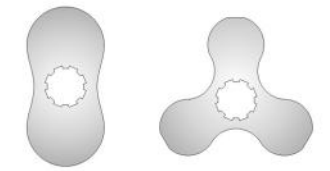

二叶转子
2-leaves rotor

三叶转子
3-leaves rotor

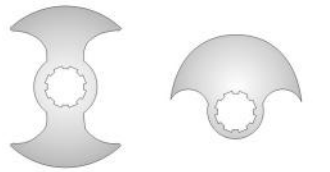

蝶形转子
Butterfly rotor

单蝶形转子
Signal Butterfly rotor

WWW.CNDONJOY.COM

卫生凸轮泵(转子泵)
Hygienic lobe pump(rotor pump)

工作原理图

A.由于转子旋转，两个转子的间距增大导致吸入端的空间也增大由此引起部分真空，从而把流体牵引入泵腔中。
B.由于轴旋转的原理，两个转子都是不断的加载空气，液体被移到传送端，转子间的间隔和泵体两壁间的间隔保证了空间总是适时被加载。
C.泵腔完全加载后，液体通过转子叶片甩出并与两壁间的空间相反。

Drawing of operating principles

A.As the lobes rotate,the space on the suction side increases as one lobe is distanced from another,thus creating a partial vacuum which draws the fluid into the pump chamber.
B.As they are rotated by the shafts, each lobe is consecutively filled and the fluid is displaced to the delivery side. The small gaps between the lobes and between the lobes and the walls of te pump body ensure that the spaces are duly filled.
C.The pump housing is ompletely filled and the fluid escapes through the teeth of the lobes and is forced against the walls of the spaces,which contributes to the pump action.

转子间隙公差 Rotor gap tolerance

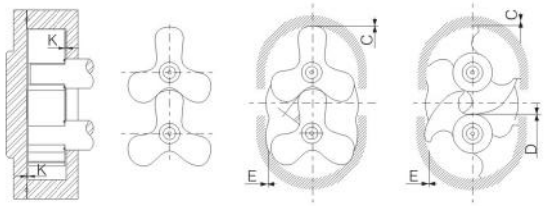

转子安装间隙推荐表
Lobe Assembling Clearence Recommend Table

Size	C(mm)	D(mm)	E(mm)	K(mm)	Size	C(mm)	D(mm)	E(mm)	K(mm)
TUL/TUR 20	0.25 ± 0.05	0.20 ± 0.05	0.20 ± 0.05	0.20 ± 0.03	TUL/TUR 60	0.30 ± 0.05	0.30 ± 0.05	0.30 ± 0.05	0.40 ± 0.05
TUL/TUR 23	0.25 ± 0.05	0.20 ± 0.05	0.20 ± 0.05	0.20 ± 0.03	TUL/TUR 70	0.40 ± 0.05	0.40 ± 0.05	0.50 ± 0.05	0.50 ± 0.05
TUL/TUR 25	0.25 ± 0.05	0.20 ± 0.05	0.20 ± 0.05	0.20 ± 0.03	TUL/TUR 80	0.40 ± 0.05	0.40 ± 0.05	0.50 ± 0.05	0.50 ± 0.05
TUL/TUR 30	0.30 ± 0.05	0.30 ± 0.05	0.30 ± 0.05	0.30 ± 0.05	TUL/TUR 100	0.40 ± 0.05	0.40 ± 0.05	0.50 ± 0.05	0.50 ± 0.05
TUL/TUR 35	0.30 ± 0.05	0.30 ± 0.05	0.30 ± 0.05	0.30 ± 0.05	TUL/TUR 125	0.40 ± 0.05	0.40 ± 0.05	0.50 ± 0.05	0.50 ± 0.05
TUL/TUR 55	0.30 ± 0.05	0.30 ± 0.05	0.30 ± 0.05	0.30 ± 0.05		0.40 ± 0.05	0.40 ± 0.05	0.50 ± 0.05	0.50 ± 0.05

各种连接方式 Various connections

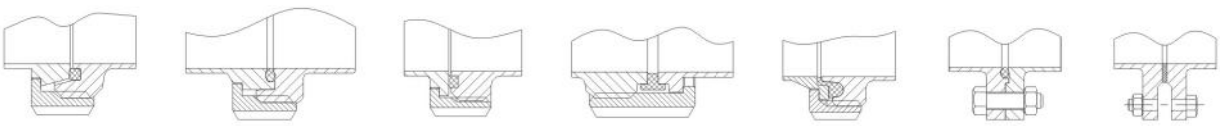

DIN11851　DIN11864-1-A　SMS　ISO/IDF　RJT　DIN11864-2-A　普通法兰

WWW.CNDONJOY.COM

DONJOY创新设计
专利保护
外观专利
实用新型2项

设计和特点 Design and features

◆水平式TUL
垂直式TUR
◆蝶形转子(标准)
◆卫生设计根据3A
◆卫生外置式机封设计
◆容易清洁和维护
◆连接：卡箍(标准)
◆适于CIP清洗和SIP杀菌

◆Horizontal TUL
Vertical TUR
◆Bare-shaft construction
◆Butterfly rotor(standard)
◆Hygienic design of the attachment of the rotors
◆Sanitary mechanical seal, Easy cleaning and maintenance
◆Connections:Clamp(standard)
◆Applied to CIP cleaning and SIP sterilization

选项

◆机械密封圈：SIC/SIC/EPDM/TC/TC/EPDM
◆水冷却机械密封、单机械密封
◆垫圈FPM(Viton),NBR,EPDM
◆外置安全系统
◆内置安全系统
◆带端面保温室
◆全保温室
◆垂式TUR系列，水平式TUL系列
◆各种类型的驱动和装置：
(1)手动机械无极调速
(2)变频电机调速(变频器订购时需说明)
(3)定速比输出(固定转速)
◆连接：卡箍(DIN32676,3A,ISO)，螺纹(DIN,SMS,RJT,IDF)对焊，法兰
◆材质证书(3.1)，表面粗糙证书
◆电机安装型号(B5)，电机频率50HZ，60HZ
◆电压(V)220-240，360-400，420-460，630-690
◆电机标准：国际IEC(标准)/美国NEMA(选项)

Options

◆Mechanical seal: SIC/SIC/EPDM/TC/TC/EPDM
◆Flushed single or double mechanical seal
◆Gasket: FPM(Viton),NBR,EPDM
◆Relief valve at the front cover or external by-pass
◆Built-in safety valve
◆End-face heat jacket
◆Complete heat jacket
◆Vertical TUR series or Horizontal TUL series
◆Different drives and fixes:
(1)Manual Continuously Variable Transmission
(2)Frequency converter adjust motor gear box
(3)Fixed speed output transmission
◆Assembly on a stainless steel baseplate
◆Connections:Clamp(DIN32676,3A,ISO),Thread(DIN,SMS,RJT,IDF)butt weld, flange
◆Material certificates(3.1),roughness certificate
◆Motor type B5.Motor frequency 50HZ,60HZ
◆Voltage(V)220-240,360-400,420-460,630-690

技术规格 Technical specifications

◆最大流量：90m³/h/395 GPM
◆最高压力：12bar/174 PSI
◆最高温度：150℃/302°F
◆最高转速：1450 rpm
◆Max.flow: 90m³/h/395 GPM
◆Max.pressure: 12bar/174 PSI
◆Max.working temperature: 150℃/302°F
◆Max.rev: 1450 rpm

电机采用IEC EN IE2高效等级(相当于中国二级能效)，PTC热敏电阻
Motor utilize the IEC EN IE2(Equivalent to China two energy efficiency), PTC thermistor

宽电压电机Wide input range motor

功率(kw) Power	电压备注 Voltage	功率(kw) Power	电压备注 Voltage
0.75		4	
1.1	210V~230V/50HZ	4.5	360V~400V/50HZ
1.5	360V~400V/50HZ	7.5	630V~690V/50HZ
2.2	420V~460V/60HZ	11	420V~460V/60HZ
3		15	

WWW.CNDONJOY.COM

卫生凸轮泵(转子泵)
Hygienic lobe pump(rotor pump)

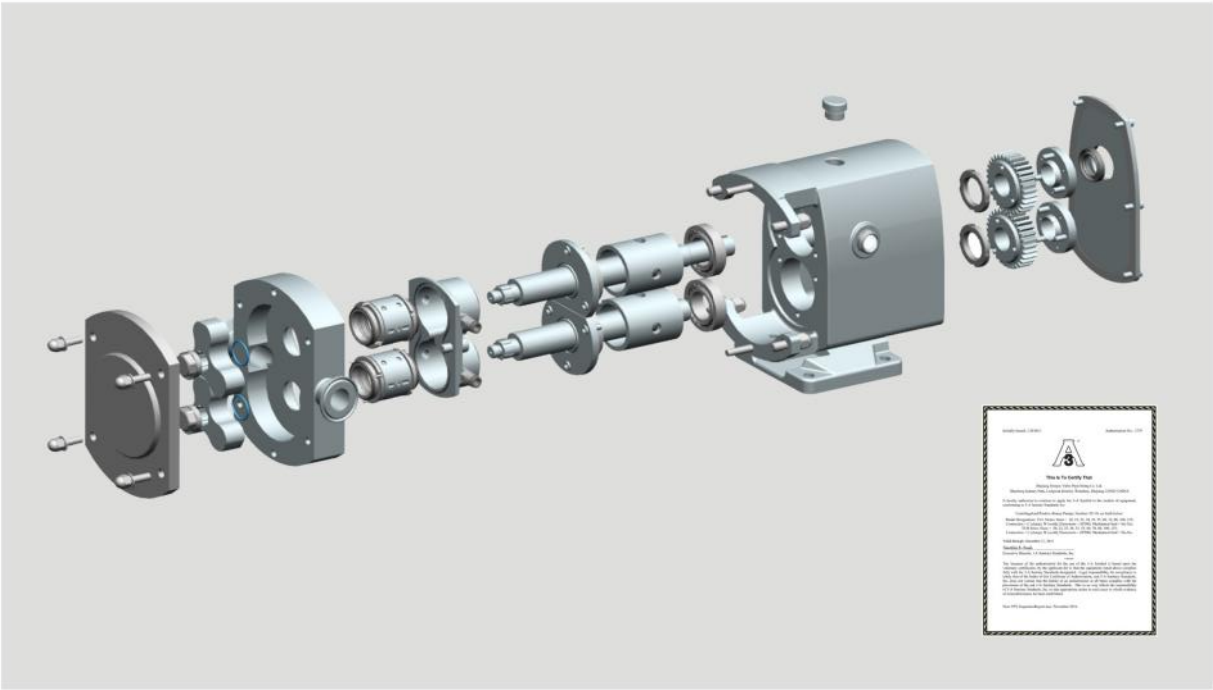

WWW.CNDONJOY.COM

保温型转子泵 Lobe pump with heat jacket

配置保温室的转子泵广泛应用于输送巧克力，糖果，胶基等在常温下凝冻或高温下易变质的物料，根据工艺要求配备前盖保温或者四周保温等机构。

Lobe pump with heat jacket is widely used in transportation of chocolate, candy, gum, etc. Which materials will freeze at room temperature or perishable materials at high temperatures, according to process requirements, with the front cover or around the heat insulation structure.

水冷机封(双机封设计)转子泵
Water-cooled mechanical seal Lobe pump

带冷却装置的转子泵，适用于高温，高粘稠，长时间不停机，开机时或工作中偶有瞬间缺液工况上较为理想的选择。但一定要注意保持冷却液循环!

Lobe pump with water-cooled mechanical seal is used for high temperature,high viscosity,continue working long hours,it is perfect choise for working condition with intermission of liquid. Be sure to keep cooling water circulation!

双机封冷却液循环进出口
Double mechanical seal

多种配置的转子泵 Various Configurations Of Rotor Pump

防爆电机转子泵
Lobe pump with explosion-proof motor

◆该泵配置了机械无极变速箱，可通过变速箱的手轮调速器，可通过变速箱的手轮调速，调节至工况所需要的转速。

◆通过美国3A-02-10认证(1579)，密封符合FDA.177.2600

◆It it with manual adjustable gearbox, the speed can be manually adjusted by handwheel in the gearbox according to working condition.

◆Pump is 3A approval,3A certificate No.is 1579,gaskets comply with FDA177.2600.

移动式转子泵
Mobile lobe pump

◆该设计可以满足随时移动抽取各种容器中的各种物料。

◆标准配置：控制台、移动车子带锁、机械无极变速箱。

◆选项：控制台内置变频器，变频电机(其他配置可参考泵的选项)

◆Mobile lobe pump can move at any time to containers and pump products inside.

◆Standard configuration is with console, lockable mobile plate, mechanical avariable gearbox.

◆Option: Console with built-in converter, frequency conversion motor(For more informtion, Please rfer to lobe pump catalogue which you will find under this products)

卫生安全防护型转子泵
Lobe pump with protected cover

◆该泵采用全防护设计，减少了因泵驱动装置不规则引起的死角，该护罩还可以保护人身安全的电机防护。

◆The pump is designed with full protection, reducing dead angle due to irregular pump drive.Protective cover can also keep personal safety from motor.

变频无极转子泵
Lobe pump with frequency converter

◆配置斜齿轮变速箱和变频电机，该配置可通过变频器和变频电机连接，可人为编辑，变频器参数达到转速成调整，也可通过PLC编程实现自动控制。

◆With inclined gearbox and frequency converter motor, the rotary speed can by adjusted by connecting converter and motor,it also automatic controls by PLC programming realization.

WWW.CNDONJOY.COM

卫生凸轮泵(转子泵)
Hygienic lobe pump(rotor pump)

多种配置的转子泵 Various Configurations Of Rotor Pump

法兰料斗进口转子泵
Lobe pump with flange hopper

◆该泵设计有方形法兰料斗和圆形法兰料斗两种，该装置可有效的解决不易流动的物料输送。

◆There are two type flange hoppers:Square flange hopper and circular flangehopper.Lobe pump with flange hopper can effectively solve transportation of uneasy flowing liquid.

内置安全系统转子泵
Lobe pump with built–in safety valve

◆该装置有效的缓解，输送过程中因其他设备故障或管道压力瞬时超过安全值而导致泵故障。

◆特点：当压力超过预设压力时内置安全阀自动打开，也可通过气体强迫打开安全阀。

◆选项：气/气，弹簧/气，压力从1bar–6bar

◆Lobe pump with built–in safety valve effectively reduced the possibility of pump breakdown due to other equipment's failure causes pipeline pressure excessing than the safety valve during transportation.

◆Features:Relief valve automatically opens when the pressure exceeds the set safety pressure, it can also be pneumatic opened.

◆Options:air/air,spring/air,pressure from 1bar–6bar

保温型转子泵
Lobe pump with heat jacket

◆该泵设计有端面保温室、外围保温室和全保温室三种选，该泵可以有效的解决，因温差而导致物料流动不畅、凝固、变质等情况。

◆There are three type:periphery heat jacket,surface heat jacket and complete heat jacket.It will avoid freezing, deterioration caused by temperation deference.

外置安全系统转子泵
Lobe pump with external safety valve

◆该泵可以解决因泵出口管道堵塞或其他的仪器和设备导致压力过高，该装置可不损失物料的情况下保证管道压力平稳和安全。

◆注意：该装置适用于流动性较好的物料。

◆This pump can solve the problem due to congestion of pump outlet or other equipment and facilities which causes too high pressure.The device guarantees the case of no loss of material to keep pressure of pipeline stable and safe.

◆Note:this device is applicable to the liquidity good materials.

WWW.CNDONJOY.COM

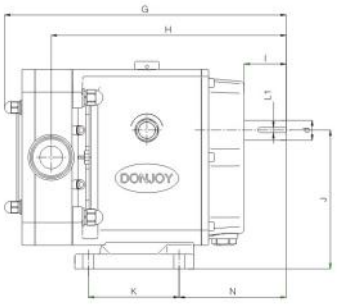

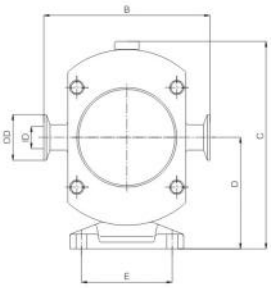

水平式转子泵 Horizontal (TUL) lobe pump

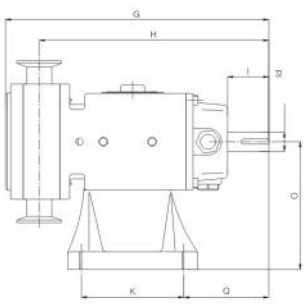

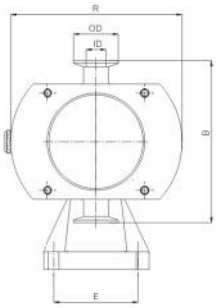

垂直式转子泵 Vertical (TUR) lobe pump

系列 Series	B	C	D	E		G	H	I	J	K		L1	N	O	Q	R	OD	ID	d	d1
				TUL	TUR					TUL	TUR									
TUL/TUR-20	183	229	123	100	95	311	260	46.5	153	100	115.5	6	118	144.5	96	194	50.5	25	22	12
TUL/TUR-23	183	229	123	100	95	315.5	264.5	46.5	153	100	115.5	6	118	144.5	96	194	50.5	35	22	12
TUL/TUR-25	183	229	123	100	95	325	274	46.5	153	100	115.5	6	118	144.5	96	194	64	47.8	22	12
TUL/TUR-30	212	271	149	125	125	432.5	357	56	186.5	125	172	8	181	179.5	116.4	230	64	47.8	28	12
TUL/TUR-35	212	271	149	125	125	438.5	363	56	186.5	125	172	8	181	179.5	116.4	230	77.5	59.5	28	12
TUL/TUR-55	212	271	149	125	125	443.5	368	56	186.5	125	172	8	181	179.5	116.4	230	91	66	28	12
TUL/TUR-60	212	271	149	125	125	447.5	372	56	186.5	125	172	8	181	179.5	116.4	230	91	72.2	28	12
TUL/TUR-70	276	390	224	193	194	525.5	439	76.5	284	208	207	8	172	238.5	135	332	91	72.2	42	18
TUL/TUR-80	276	390	224	193	194	525.5	439	76.5	284	208	207	8	172	238.5	135	332	106	72.2	42	18
TUL/TUR-100	276	390	224	193	194	534.5	448	76.5	284	208	207	8	172	238.5	135	332	119	97.6	42	18
TUL/TUR-125	276	390	224	193	194	548.5	462	76.5	284	208	207	8	172	238.5	135	332	144.5	125	42	18

表格数据仅供参考，实际尺寸以实物为准。
Only for tabular data parameters.

WWW.CNDONJOY.COM

卫生凸轮泵(转子泵)
Hygienic lobe pump(rotor pump)

WWW.CNDONJOY.COM

转子泵流量表(三菱款转子)
Rotor pump flow statement(Clover rotor)

型号 Model	Nmax/Min		
TUR/TUL-20	950	0.137	13.7
TUR/TUL-23		0.194	19.4
TUR/TUL-25		0.273	27.3
TUR/TUL-30	720	0.423	42.3
TUR/TUL-35		0.53	53.0
TUR/TUL-55		0.602	60.2
TUR/TUL-60		0.665	66.5
TUR/TUL-70	600	1.524	152.4
TUR/TUL-80		1.583	158.3
TUR/TUL-100		1.956	195.6
TUR/TUL-125		2.487	248.7

转子泵流量表(蝶形转子)
Rotor pump flow statement(Butterfly rotor)

型号 Model	Nmax/Min		
TUR/TUL-20	950	0.15	15
TUR/TUL-23		0.212	21.2
TUR/TUL-25		0.298	29.8
TUR/TUL-30	720	0.496	49.6
TUR/TUL-35		0.631	63.1
TUR/TUL-55		0.705	70.5
TUR/TUL-60		0.778	77.8
TUR/TUL-70	600	1.791	179.1
TUR/TUL-80		1.824	182.4
TUR/TUL-100		2.299	229.9
TUR/TUL-125		2.922	292.2

注意：每转排量的容积表，是根据(相当于牛奶粘度介质)结果，如果其他的介质会出现变化

机械无极调速转子泵
Mechanical stepless speed LOBE PUMPS

手动调节转速流量可调节
注意：该减速机最大功率7.5KW
Manually speed regulation, but also can change flow
Maximum power 7.5KW

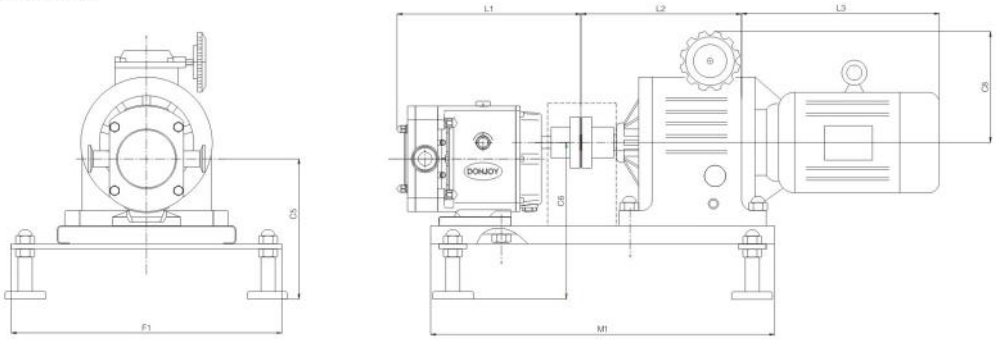

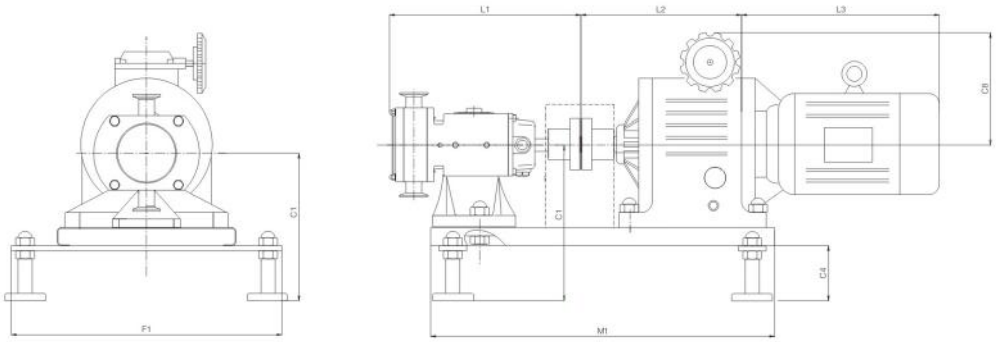

系列 Series	L1	C1	C4	C5	C6	M1	F1
TUL/TUR-20	296	296.5	102	275	305	680	475
TUL/TUR-23	300.5	296.5	102	275	305	680	475
TUL/TUR-25	310	296.5	102	275	305	680	475
TUL/TUR-30	417.5	331.5	102	301	338.5	780	555
TUL/TUR-35	423.5	331.5	102	301	338.5	780	555
TUL/TUR-55	428.5	331.5	102	301	338.5	780	555
TUL/TUR-60	432.5	331.5	102	301	338.5	780	555
TUL/TUR-70	510.5	390.5	102	376	436	950	625
TUL/TUR-80	510.5	390.5	102	376	436	950	625
TUL/TUR-100	519.5	390.5	102	376	436	950	625
TUL/TUR-125	533.5	390.5	102	376	436	950	625

系列 Series	L2	L3	C8
075kw	223	285	176
1.1kw	223	285	176
1.5kw	223	285	176
2.2kw	268	320	205
30.kw	268	340	205
4.0kw	268	340	205
5.5kw	319	395	247
7.5kw	319	435	247
11kw	–	–	–
15kw	–	–	–

注意：如需配置以上减速机和电机请参照：电机=L5,减速机长度=L4,电机中心高度=C8

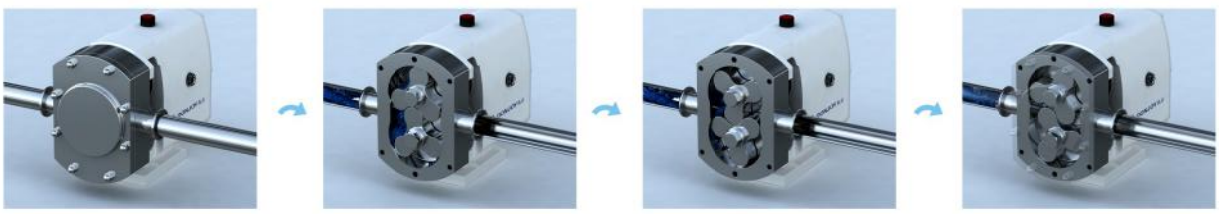

WWW.CNDONJOY.COM

变频调速/定速比输出转子泵
Frequency control/Fixed speed ratio output LOBE pumps

(1)配置变频器，转速可变流量可变　(2)定输比输出，转速是一定，流量不可变
(1)Configure the frequency converter variable speed, variable flow　(2)Fixed speed ratio output, speed is constant, flow is immutable

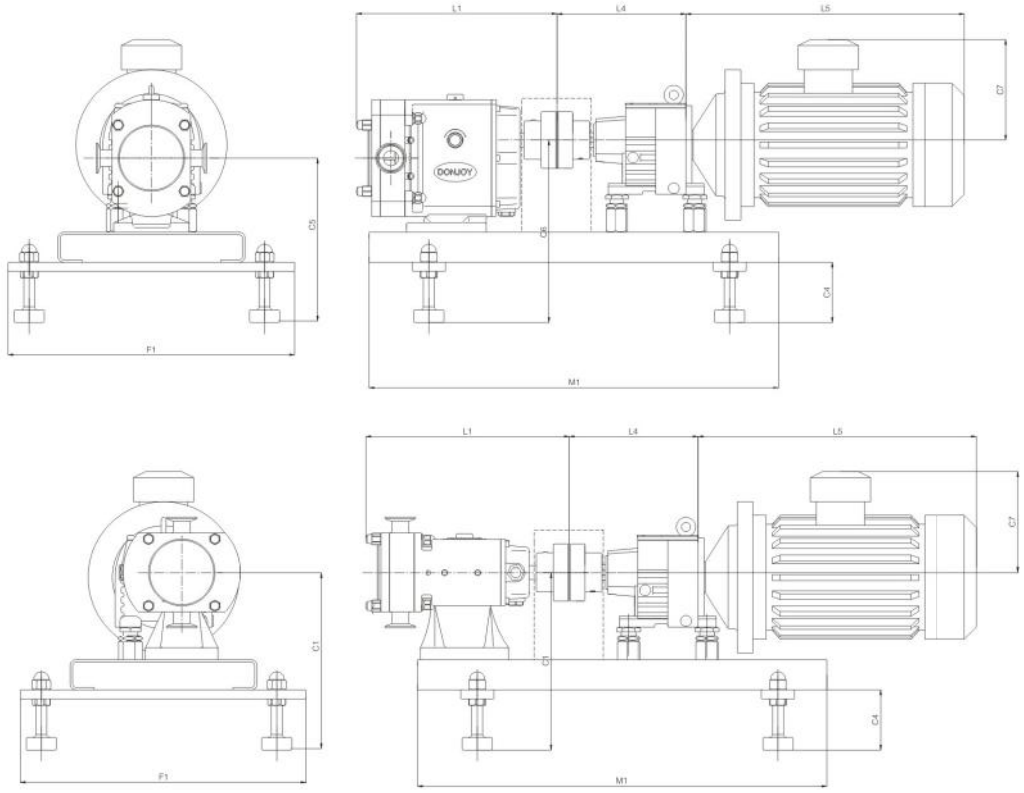

系列 Series	L1	C1	C4	C5	C6	M1	F1
TUL/TUR-20	296	296.5	102	275	305	680	475
TUL/TUR-23	300.5	296.5	102	275	305	680	475
TUL/TUR-25	310	296.5	102	275	305	680	475
TUL/TUR-30	417.5	331.5	102	301	338.5	780	555
TUL/TUR-35	423.5	331.5	102	301	338.5	780	555
TUL/TUR-55	428.5	331.5	102	301	338.5	780	555
TUL/TUR-60	432.5	331.5	102	301	338.5	780	555
TUL/TUR-70	510.5	390.5	102	376	436	950	625
TUL/TUR-80	510.5	390.5	102	376	436	950	625
TUL/TUR-100	519.5	390.5	102	376	436	950	625
TUL/TUR-125	533.5	390.5	102	376	436	950	625

规格	L4	L5	C7
075kw	201	245	128
1.1kw	201	260	118
1.5kw	201	285	118
2.2kw	201	320	178
30.kw	201	320	178
4.0kw	241	335	177.5
5.5kw	241	385	199.5
7.5kw	280	425	205
11kw	440	490	250.5
15kw	440	535	250.5

注意：如需配置以上减速机和电机请参照：电机=L5,减速机长度=L4,电机中心高度=C7

WWW.CNDONJOY.COM

卫生凸轮泵(转子泵)
Hygienic lobe pump(rotor pump)

转子泵特性曲线图 Hygienic lobe pump peeformation cure

TUR/TUL转子流量Q(T/h)–压力(bar)曲线图
TUR/TUL pump Q(T/h)–speed(bar)

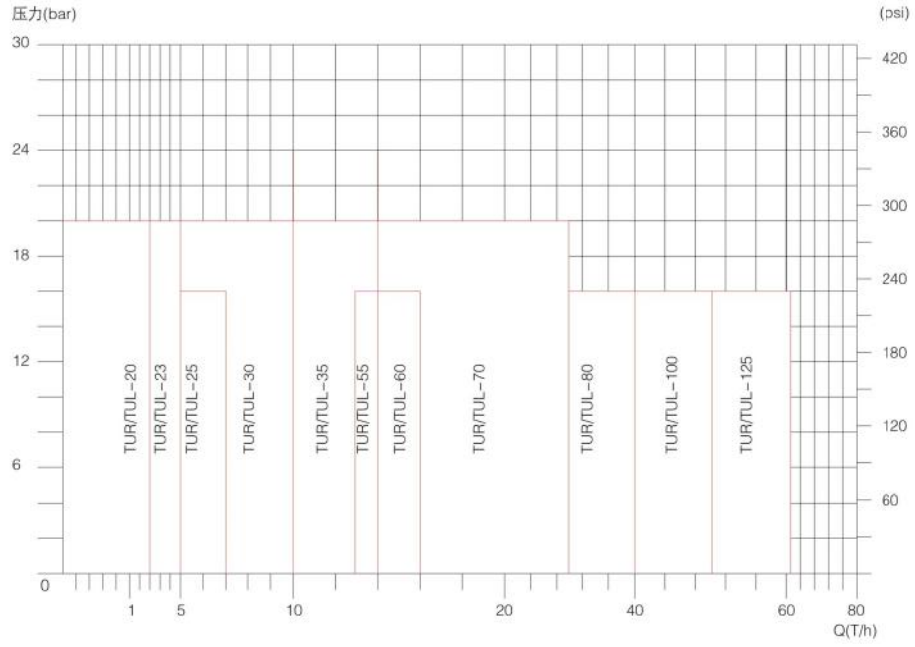

TUR/TUL转子泵流量Q(T/h)–转速(r.p.m)曲线图(DWG.01)
TUR/TUL flow rate Q(T/h)–speed(r.p.m) cure figure (DWG.01)

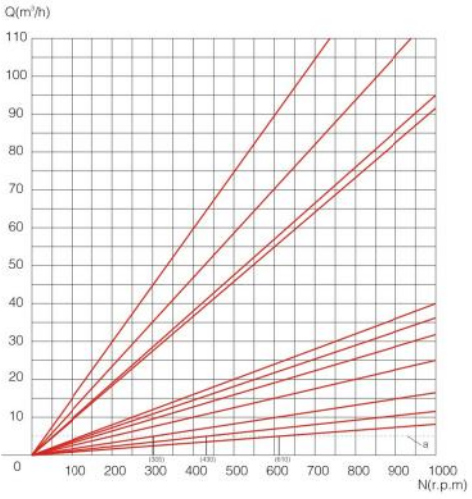

TUR/TUL转子泵汽蚀余量NPSHr(M)/–转速(r.p.m)曲线图(DWG.02)
TUR/TUL pump NPSHr(M)/–speed(r.p.m)cure figure(DWG.02)

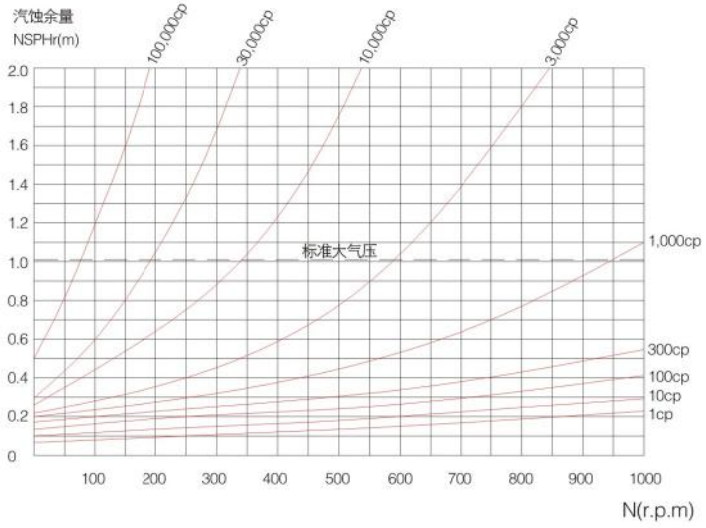

说明：流量计算公式Q=0.06K*N，其中Q: 流量(T/h)，K：排量系数(L/转)，
N：转速--200~1000(r.p.m)

WWW.CNDONJOY.COM

卫生凸轮泵(转子泵)
Hygienic lobe pump(rotor pump)

TUR/TUL转子泵粘度(cp)与粘度系数f曲线图(DWG.03)
TUR/TUL lobe pump viscosity(cp)and viscosity factor f cure figure (DWG.03)

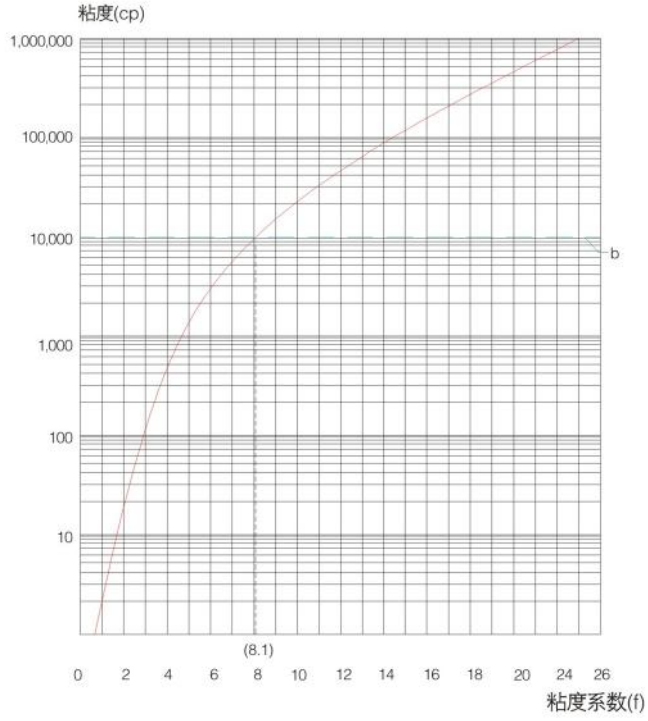

机械密封功率系数(Tab.01)

机封类型	机封材料	功率系数s
单机封	SIC/SIC	0.5
双机封	SIC/SIC	1

电机功率按下面公式计算:
Motor power in the following formula:
P=(Q*H/18.5+f+s)*N

叶轮驱动扭力按下面公式计算:
Impeller drive torque in the following formula:
M=P*9.56/N
P=功率power (W)
H=出口压力Outlet pressure (Bar)
f=粘度功率系数Viscosity power coefficient
(查图 Check chart DWG.03)
S=机械密封功率系数Mechanical seal power coefficient
(查表 Check chart Tab.01)
N=叶轮转速Impeller speed(r.p.m)
M=扭力 torsion (N.M)

选型举列:

最大流量5T出口压力10bar,粘度10.000cp,如何选转子泵选择步骤如下:

1.预选转速,图DWG01,画5T---虚线a与斜线相交的转速为:

N_{-20}=610 r.p.m
N_{-23}=430 r.p.m
N_{-25}=305 r.p.m

2.确定粘度系数,图DWG03,画粘度10,000cp---虚线b与曲线相交,得粘度系数为:

f=8.1

3.确定机械密封功率系数单机封,密封材料SIC/SIC

s=0.5

4.计算功率

根据公式P=(Q*H/18.5+f+s)*N得:

P_{-20}=(5*10/18.5+8.1+0.5)x610=6.894kw
P_{-23}=(5*10/18.5+8.1+0.5)x430=4.860kw
P_{-25}=(5*10/18.5+8.1+0.5)x305=3.447kw

5.确定型号

根据手册型号表

TUL/TUR-25 3-7T1bar/4.0kw可满足参数要求

Type lift column:

Maximum flow 5 T outlet pressure 10bar, viscosity 10.000 cp, how to choose rotor pump Choose steps are as follows:

1.The primary speed, figure DWG01, draw 5 T – dotted line a and lash at the intersection of speed for:

N_{-20}=610 r.p.m
N_{-23}=430 r.p.m
N_{-25}=305 r.p.m

2.Determine the coefficient of viscosity, figure DWG03, drawing viscosity 10,000cp---dotted line b and curve phase Pay,coefficient of viscosity for:

f=8.1

3.Determine mechanical seal power coefficient single seal, seal material SIC/SIC

s=0.5

4.Computing power

According to the formula P=(Q*H/18.5+f+s)*N must:

P_{-20}=(5*10/18.5+8.1+0.5) x610=6.894kw
P_{-23}=(5*10/18.5+8.1+0.5) x430=4.860kw
P_{-25}=(5*10/18.5+8.1+0.5) x305=3.447kw

5.Sure model

According to the manual type table

TUL/TUR – 25 3 to 7T1bar/4.0kw can meet requirements parameters

WWW.CNDONJOY.COM

转子泵机械无极变速 Mechanical Continuously Variable Transmission Lobe Pump

说明：
无极变速机：结构为目前最常用的配备的形式，配备的是机械摩擦式无极调节器，利用手动调节的形式实现输出转速的无极调节，达到无极调节流量的效果。

Description:
Continuously variable transmission,the strcture is equipped with the most commonly,used form of mechanical friction stepless adjuster,the use of manual adjustment in the form of realization of the output speed stepless adjustment, to regulate flow of stepless effects.

WWW.CNDONJOY.COM

TUR–TUL系列选型表 TUR–TUL Series selection talbe

50Hz/60Hz N–200~1000Min

型号 Model		流量(吨) Flow rate(m^3/h)	压力 (BAR) Pressure	电机功率 (kw) Motor Power	建议转速 (Min–1) Recommend rotate speed	每转排量 (升) Flow per Rotate	每100转 排量(升) Flow per 100 Rotate	进/出口规格 Inlet & Outlet Size
TUR–20	TUL–20	1–3	12	1.5kw	200–450	0.137	13.7	1"–DN25
		1–3	9	1.1kw				
		1–3	5	0.75kw				
TUR–23	TUL–23	2–5	12	3.0kw	200–450	0.194	19.4	1.5"–DN40
		2–5	9	2.2kw				
		2–5	5	1.5kw				
TUR–25	TUL–25	3–7	10	4.0kw	200–450	0.273	27.3	2"–DN50
		3–7	7	3.0kw				
		3–7	4	2.2kw				
TUR–30	TUL–30	5–10	12	5.5kw	200–400	0.423	42.3	2"–DN50
		5–10	8	4.0kw				
		5–10	4	3.0kw				
TUR–35	TUL–35	6.5–13	10	5.5kw	200–400	0.53	53	2.5"
		6.5–13	7	4.0kw				
		6.5–13	3	3.0kw				
TUR–55	TUL–55	7–14	12	7.5kw	200–400	0.602	60.2	DN65
		7–14	9	5.5kw				
		7–14	6	4.0kw				
		7–14	3	3.0kw				
TUR–60	TUL–60	8–16	10	7.5kw	200–400	0.665	66.5	3"
		8–16	7	5.5kw				
		8–16	5	4.0kw				
		8–16	3	3.0kw				
TUR–70	TUL–70	15–31	9	7.5kw	200–400	1.524	152.4	3"
		15–31	5	5.5kw				
TUR–80	TUL–80	20–40	7	7.5kw	200–400	1.583	158.3	DN80
		20–40	4	5.5kw				
TUR–100	TUL–100	25–50	6	7.5kw	200–400	1.956	195.6	4"–D100
		25–50	3	5.5kw				

注意：流量是根据三菱转子计算的结果，如需其他的转子流量请与东正联系。
Note: Flow rate is according to 3–leaves rotor,for flow rate of other rotor,Please contact Donjoy for details.

卫生凸轮泵(转子泵)
Hygienic lobe pump(rotor pump)

变频调速/定速比输出转子泵 Frequency converter/Fixed speed output reducer lobe pump

说明：
变频调速输出：其速度是可调节的，流量也是可以可调的。
定速比输出减速机：其速度是不可调节的，输出流量也是一定的也不可调节的。其结构特点，扭矩大，对于特别粘稠的物料的输送效果最好。

Description:
Fixed speed output reducer: with a fixed speed output transmission, its speed is not regulated, the output flow rate is certain, also can not be adjusted. Its structural characteristics is high torque,perfect for transfer of viscous material.

TUR-TUL系列选型表 TUR-TUL Series selection talbe

50Hz/60Hz N-50~800Min

型号 Model		流量(吨) Flow rate(m^3/h)	压力 (BAR) Pressure	电机功率 (kw) Motor Power	建议转速 (Min-1) Recommend rotate speed	每转排量 (升) Flow per Rotate	每100转 排量(升) Flow per 100 Rotate	进/出口规格 /连接方式 Inlet & Outlet Size
TUR-20	TUL-20	1-2	20	3.0kw	100-450	0.15	15	1"-DN25 卡箍、螺纹 DIN,SMS,IDF,RJT
		1-3	15	2.2kw				
		1-3	12	1.5kw				
		1-3	9	1.1kw				
		1-3	5	0.75kw				
TUR-23	TUL-23	2-5	20	4.0kw	100-450	0.212	21.2	1.5"-DN40 卡箍、螺纹 DIN,SMS,IDF,RJT
		2-5	15	3.0kw				
		2-5	12	2.2kw				
		2-5	9	1.5kw				
		2-5	5	1.1kw				
TUR-25	TUL-25	3-7	15	5.5kw	100-450	0.298	29.8	2"-DN50 卡箍、螺纹 DIN,SMS,IDF,RJT
		3-7	10	4.0kw				
		3-7	7	3.0kw				
		3-7	4	2.2kw				
TUR-30	TUL-30	5-10	20	7.5kw	100-400	0.496	49.6	2"-DN50 卡箍、螺纹 DIN,SMS,IDF,RJT
		5-10	12	5.5kw				
		5-10	8	4.0kw				
		5-10	4	3.0kw				
TUR-35	TUL-35	6.5-13	18	7.5kw	100-400	0.631	63.1	2.5"-DN50 卡箍、螺纹 DIN,SMS,IDF,RJT
		6.5-13	10	5.5kw				
		6.5-13	7	4.0kw				
		6.5-13	3	3.0kw				
TUR-55	TUL-55	7-14	12	7.5kw	100-400	0.705	70.5	DN65 卡箍、螺纹、法兰 DIN,SMS,IDF,RJT
		7-14	9	5.5kw				
		7-14	6	4.0kw				
		7-14	3	3.0kw				
TUR-60	TUL-60	8-16	10	7.5kw	100-400	0.778	77.8	3" 卡箍、螺纹、法兰 DIN,SMS,IDF,RJT
		8-16	7	5.5kw				
		8-16	5	4.0kw				
		8-16	3	3.0kw				
TUR-70	TUL-70	15-31	18	15kw	100-360	0.1791	17.91	3" 卡箍、螺纹、法兰 DIN,SMS,IDF,RJT
		15-31	12	11kw				
		15-31	9	7.5kw				
		15-31	5	5.5kw				
TUR-80	TUL-80	20-40	15	15kw	100-360	1.824	182.4	DN80 卡箍、螺纹、法兰 DIN,SMS,IDF,RJT
		20-40	10	11kw				
		20-40	7	7.5kw				
		20-40	4	5.5kw				
TUR-100	TUL-100	25-50	10	11kw	100-360	229.9	22990	4"-DN100 卡箍、螺纹、法兰 DIN,SMS,IDF,RJT
		25-50	6	7.5kw				
		25-50	3	5.5kw				
TUR-125	TUL-125	31-62	10	15kw	100-360	292.2	29220	5"-DN125 卡箍、螺纹、法兰 DIN,SMS,IDF,RJT
		31-62	7	11kw				
		31-62	4	7.5kw				

WWW.CNDONJOY.COM

转子泵型号说明 Model Instruction Of Lobe Pump

TUL	20	1-3t	12bar	1.5kw	380V	50HZ	MBW	M	DN25	D

- D — 接口标准：DIN(D),SMS(S),3A(A),RJT(R),ISO/IDF(I)
  Connection standard:
  DIN(D),SMS(S),3A(A),RJT(R),ISO/IDF(I)
- DN25 — 进出口规格Inlet & Outlet Size
- M — 连接方式：螺纹(M) 卡箍(C)
  Connection way:threaded(M), Clamped(C)
- MBW — 减速机款式：机械无极调速(MBW);
  变频电机调速(WR–QA)；
  定速比输出转速(固定转速)(WR)
  Reducer type:Mechanical Continuously Variable transmission(MBW),
  Converter motor transducer(WR–QA).
  Fixed speed output reducer(WR)
- 50HZ — 电机频率：50HZ；60HZ
  Motor frequency: 50HZ;60HZ
- 380V — 电压：110V 220V 380V(详见选型表)
  Voltage: 110V 220V 380V(refer to selection table)
- 1.5kw — 电机功率：1.1kw 1.5kw 2.2kw.....
  Motor power:1.1kw 1.5kw 2.2kw.....
- 12bar — 转子泵压力(详见选型表)
  Pressure(refer to selection table)
- 1-3t — 转子泵流量(详见选型表)
  Flow rate(refer to selection table)
- 20 — 转子泵型号 Model
- TUL — 转子泵出口方式代码：
  TUL水平式(左右进出)；TUR垂直式(上进下出)
  Lobe Pump Structure Code,
  Vertical TUR series (From Up to Down),
  Horizontal TUL series (Right & Left)

例：TUL–20–1–3–12bar–1.5kw–380V–50HZ MBW–M–DN25–D
Sample:TUL–20–1–3–12bar–1.5kw–380V–50HZ MBW–M–DN25–D

WWW.CNDONJOY.COM

全不锈钢高洁净离心泵(S-KS系列)
Stainless steel high purity centrifugal pump(S–KS series)

WWW.CNDONJOY.COM

应用

◆S–KS系列离心泵，是一款包含电机和整台都是不锈钢材料制造而成的，不但高洁净外观和内部设计，且可在线高压水枪冲洗，防护等级IP67，最高可达IP69等级。
◆该泵具有高扬程、低噪音、大流量、无死角、高效能等设计特点。并且采用高纯度母材料制造。符合ASME/BPE和EHEDG高标准要求。认证3A–02–10，CE–MD/06/42/EC。
◆该泵非常适用于高洁净工艺管道系统和工作场所，如生物制药、食品饮料、酿酒、精细化工等领域。

Applications

◆S–KS series Centrifugal pump, is a whole including the motor and pump are made of stainless steel, not only high clean exterior and interior design, also online high–pressure water rinse, IP67 up to IP69 rating.
◆The pump has a high–lift, low noise, high flow, no dead ends, high–performance and other technical characteristics. Mother and manufacture high purity materials. Compliance with ASME BPE and EHEDG high standards. Certified 3A–02–10, CE–MD / 06/42 / EC.
◆In pieces the pump is very suitable for workplace clean workshop and high clean requirements, such as biological pharmacy, Food and beverage, wine, fine chemical industry and other fields.

技术规格

最高扬程：70/M
最高温度：130℃
连接方式：卡箍、螺纹、法兰等，DIN/SMS/RJT/ISO/IDF/ASME BPE
机封设计：单机封(标准)，双机封(选项)，SIC/C(标准)，SIC/SIC(选项)

Technical specifications

Maximum lift: 70M
Maximum temperature: 130 ℃
Connection: clamp, threaded, flanged
Mechanical seal design: single seal (standard), double mechanical seal (selection), SIC / C, SIC / SIC

S-KS系列离心泵尺寸图 S-KS series centrifugal pump dimensions figure

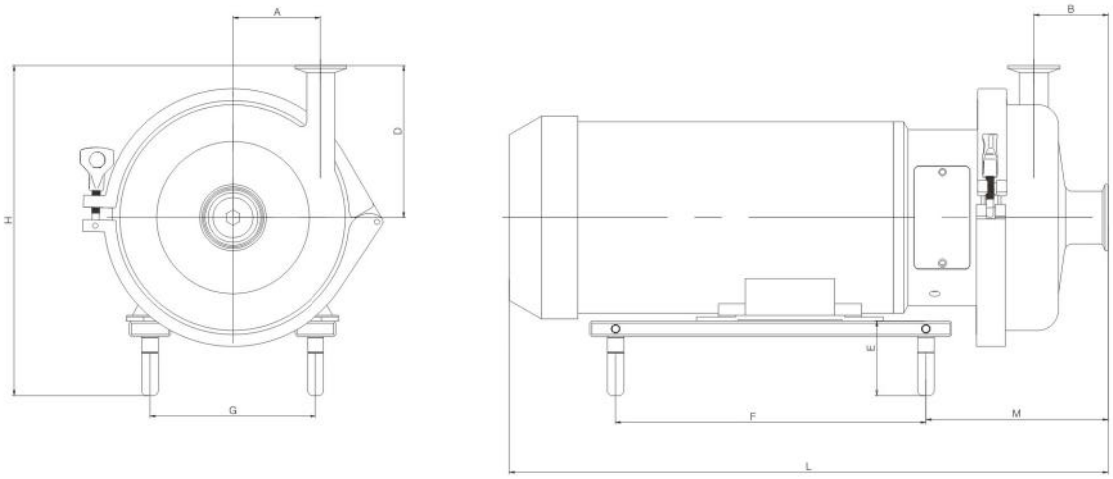

型号 Model														
	功率		出口	PB		A	B	D	M	F	G	H	L	E
KS10	1.5KW	1.5"	1.5"	195	Φ32	66	80	129	175	300	140	300	525	72
	2.2KW	1.5"	1.5"	195	Φ32	66	80	129	175	300	140	300	525	72
KS15	1.5KW	2"	1.5"	250	Φ32	85	71.5	147	176.5	300	160	318	520	72
	2.2KW	2"	1.5"	250	Φ32	85	71.5	147	176.5	300	160	318	520	72
	3KW	2"	1.5"	250	Φ32	85	71.5	147	176.5	300	160	318	579	72
KS20	3KW	2"	2"	250	Φ32	85	71.5	147	176.5	300	160	318	579	72
	4KW	2"	2"	250	Φ32	85	71.5	147	176.5	300	190	328	609	72
	5.5KW	2"	2"	250	Φ32	85	71.5	147	176.5	300	190	338	609	72
KS25	4KW	2"	1.5"	278	Φ32	95	71.5	190	176.5	300	190	355	609	72
	5.5KW	2"	1.5"	278	Φ32	95	71.5	190	176.5	300	190	355	609	72
KS30	5.5KW	2"	1.5"	278	Φ32	95	71.5	190	176.5	300	190	355	609	72
	7.5KW	2"	1.5"	278	Φ32	95	71.5	190	196	330	216	405	760	102
KS35-I	11KW	2.5"	1.5"	330	Φ36	145	90	225	196	330	216	405	760	102
	15KW	2.5"	1.5"	330	Φ36	145	90	225	230	430	216	433	860	102
KS35-II	15KW	2.5"	2"	330	Φ36	145	90	225	230	430	216	433	865	102
	18.5KW	2.5"	2"	330	Φ36	145	90	225	230	430	216	433	865	102
Ks40-I KS40-II	11KW	3"	2.5"	330	Φ36	145	90	225	196	330	216	405	760	102
	15KW	3"	2.5"	330	Φ36	145	90	225	230	430	216	433	860	102
	18.5KW	3"	2.5"	330	Φ36	145	90	225	230	430	216	433	865	102

WWW.CNDONJOY.COM

全不锈钢高洁净离心泵(S-KS系列)
Stainless steel high purity centrifugal pump(S-KS series)

各种进出口连接方式

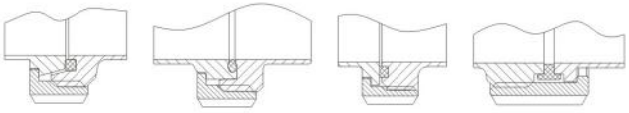

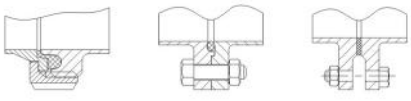

各种低排放的接口

垂直式 Vertical	端面水平式 Horizontal(To end)	倾斜式 Incline
T	L	Y

WWW.CNDONJOY.COM

DONJOY创新设计
专利保护

S-KS离心泵性能曲线图

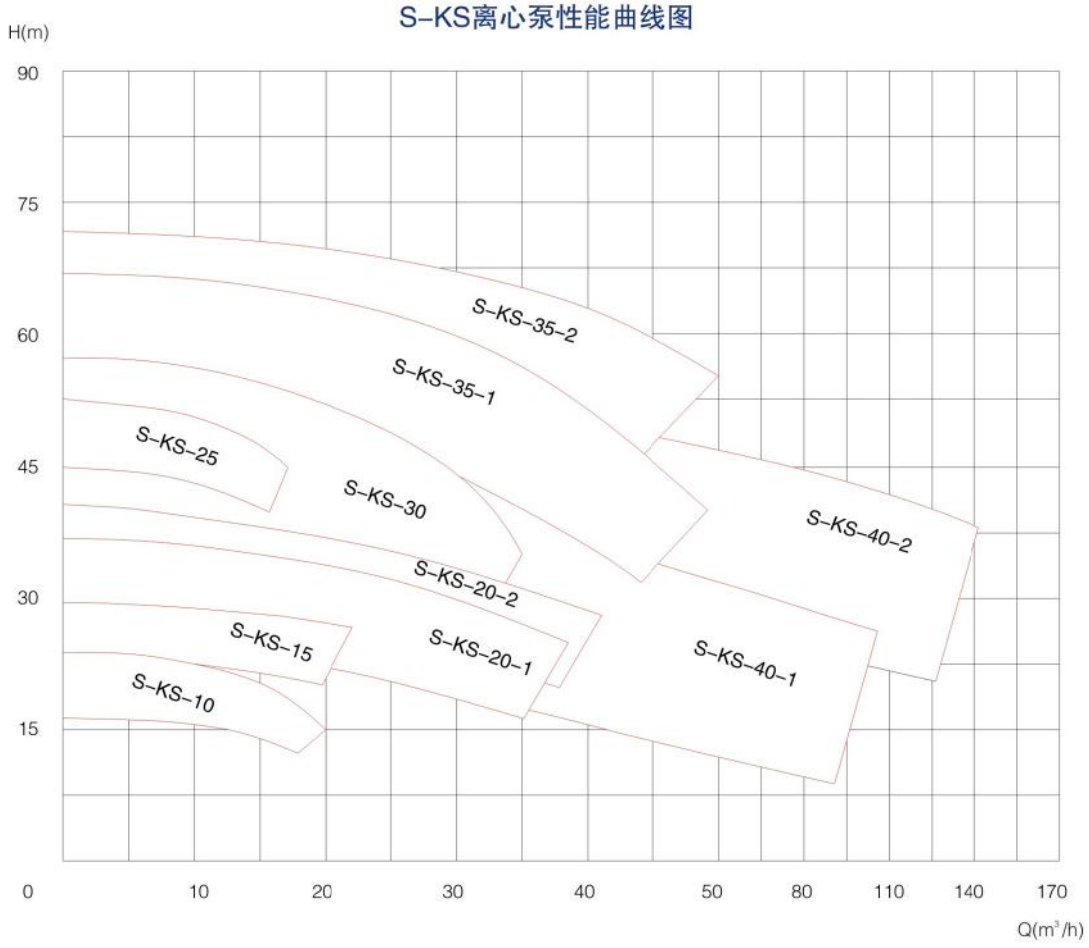

WWW.CNDONJOY.COM

全不锈钢高洁净离心泵(S-KS系列)
Stainless steel high purity centrifugal pump(S-KS series)

S-KS系列离心泵订购选型表 S-KS series centrifugal pumpordering selection table

型号 Model	选型规格		电机选择	进口/出口
	流量(T)	扬程(M)	功率(KW)*电流(A)	
S-KS-10	3	22	1.5KW	1.5"/1.5"
	5	22	1.5KW	
	8	22	1.5KW	
	9	22	1.5KW	
	12	20	1.5KW	
	15	18	1.5KW	
			2.2KW	
	18	16	2.2KW	
S-KS-15	3	30	1.5KW	2"/1.5"
	5	30	1.5KW	
	8	26	1.5KW	
			2.2KW	
	10	25	2.2KW	
	15	22	2.2KW	
	18	18	2.2KW	
			3.0KW	
	20	16	2.2KW	
			3.0KW	
S-KS20-1	5	36	2.2KW	2"/2"
			3.0KW	
	10	36	3.0KW	
			4.0KW	
	15	35	4.0KW	
	20	33	4.0KW	
	25	30	4.0KW	
			5.5KW	
	30	30	5.5KW	
	38	22	5.5KW	
S-KS20-2	20	40	5.5KW	2"/2"
	25	40	5.5KW	
	30	35	5.5KW	
	35	32	5.5KW	
	40	30	7.5KW	
	45	28	7.5KW	
S-KS25	5	50	4KW/5.5KW	2"/1.5"
	10	45	5.5KW	
	15	40	5.5KW	
S-KS-30	10	55	5.5KW	
	15	50	5.5KW	
	20	50	5.5KW	
			7.5kw	
	25	45	7.5KW	
	30	40	7.5KW	

型号 Model	选型规格		电机选择	进口/出口
	流量(T)	扬程(M)	功率(KW)*电流(A)	
S-KS-35-1	10	70	11KW	2.5"/1.5"
	15	65	11KW	
	20	65	11KW	
	25	60	11KW	
	30	60	11KW	
	35	55	11KW	
	40	50	15KW	
	45	50	15KW	
S-KS35-2	20	70	15KW	2.5"/2"
	25	70	15KW	
	30	70	15KW	
	35	65	15KW	
	40	65	15KW	
	45	60	18.5KW	
	50	55	18.5KW	
S-KS-40-1	45	42	11KW	3"/2.5"
	50	42	11KW	
	60	40	15KW	
	65	40	15KW	
	70	38	15KW	
	80	35	15KW	
	90	33	15KW	
	100	30	18.5KW	
	110	28	18.5KW	
S-KS-40-2	50	50	15KW	3"/2.5"
	60	48	15KW	
	70	47	18.5KW	
	80	46	18.5KW	

WWW.CNDONJOY.COM

离心泵(KS系列)
Centrifugal pump (KS series)

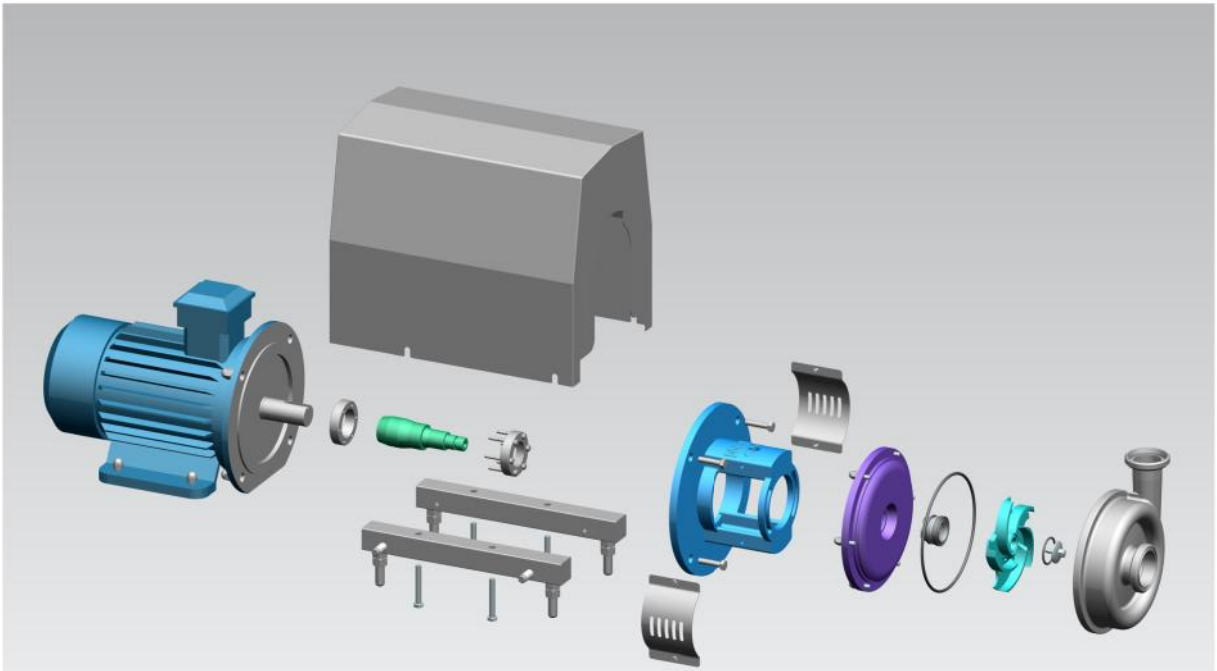

单机封设计

WWW.CNDONJOY.COM

KS系列 KS Series

◆该离心泵是不锈钢制造，带有不锈钢电机外罩。
◆卫生和低成本效益的设计，使它非常适用于乳制品、饮料、食品加工，制药和精细化工工作中。

◆The centrifugal pump is made of stainless steel and with a shrouded motor.
◆Sanitary and cost-efficient design makes it perfect for the daries,beverages, food-processing, pharmaceutical and fine chemicals industries.

工作原理 Operating principles

◆叶轮安置在泵壳里面，它和泵轴一起在联合中旋转，叶轮刀片以动能和压能和压能的形式将能量传达给流体。
◆该泵即使通过简单的反向旋转，也是不可行的。从电机后面也可以看出泵的旋转方向，正确的旋转方向，是顺时针的。

◆Housed inside the casing,the impeller rotates in conjunction with the pump shaft.With this arrangement,the impeller blades convey energy to the fluid in the form of kinetic energy and pressure energy.
◆This pump can't reversible by simple reversal of the direction of rotation.The direction of rotation is clockwise when the pump is viewed from the rear side of the motor.

离心泵(KS系列)
Centrifugal pump (KS series)

技术规格

◆最大流量：150m³/h
◆最高扬程：70h(M)
◆最高温度：120℃/248°F(满足30Min CIP/SIP)
◆最高转速：3600Min-1
◆卫生认证：3A-02-10/NO.1579，密封FDA.177.2600

Technical specifications

◆Max.Flow: 150m³/h
◆Max.Head: 70h(M)
◆Max.working temperature: 120 degree C/248 degree F (30Min CIP/SIP)
◆Max.Rev: 3600Min-1
◆Certificate: 3A-02-10/NO.1579,FDA.177.2600

设计和特点

◆不锈钢电机外围由冷成型板做；开式叶轮或闭式叶轮由不锈钢熔模铸造；
◆可调节不锈钢脚；根据3A卫生标准认证；IEC或NEMA B35电机IP55，F等级绝缘，50HZ、60HZ。

Design and features

◆Casing manufactured with cold-formed plate.Open impeller and close impeller manufactured with stainless steel investment casting;
◆Adjustable stainless steel legs,Pump designed according to 3A Sanitary standards. IEC or NEMA B34 motors, IP 55, F-class insulation, 50HZ,60HZ

材质 Materials

◆与物料接触部位：AISI-316/304
◆垫圈(标准)：EPDM(FDA)
◆机械密封圈(标准)：SIC/SIC/EPDM
◆内表面处理：Ra≤0.8μm
◆外表面处理：喷沙处理或者抛光处理

◆Parts in contact with pumped media: AISI-316/304
◆Gaskets(standard): EPDM(FDA)
◆Mechanical seal(standard): SIC/SIC/EPDM
◆Inside surface finishing: Ra≤0.8μm
◆Outside surface finishing: Sandblast or Mirror polish

电机采用IEC EN IE2高效等级(相当于中国二级能效)，PTC热敏电阻
Motor the IEC EN IE2(Equivalent to China two energy efficiency), PTC thermistor

宽电压电机Wide input range motor

功率(kw) Power	电压备注 Voltage	功率(kw) Power	电压备注 Voltage
0.55		4	
0.75		5.5	
1.1	210V~230V/50HZ	7.5	360V~400V/50HZ
1.5	360V~400V/50HZ	11	630V~690V/50HZ
2.2	420V~460V/60HZ	15	420V~460V/60HZ
3		18.5	
		30	

其他电压和频率电机请与东正联系
Please contact Donjoy for any other voltage or frequency of motor.

选项 Options

◆机械密封圈：C/SIC，TC/TC
◆垫圈：FPM(VITON)和NBR
◆进出口连接：卡箍、螺纹、法兰、DIN、SMS、RJT、IDF
◆电机：2900，1450，3600Min/1，50HZ，60HZ
◆单端面机械密封(标准)
◆水冲洗双端面机械密封(选项)

◆Mechanical seal in: C/SIC,TC/TC
◆Gaskets in: FPM(VITON)and NBR
◆Connections: Clamp,thread,flange,DIN,SMS,RJT,IDF
◆Motor: 2900, 1450 ,3600Min/1, 50HZ, 60HZ
◆Single mechanical seal(standard)
◆Flushed couble mechanical seal(Options)

WWW.CNDONJOY.COM

机械密封 Mechanical seal

机封示意图
Mechanical Sealing Fig

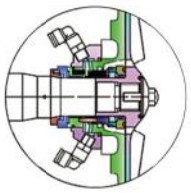

水冲洗双端机械密封
Flushed double mechanical seal

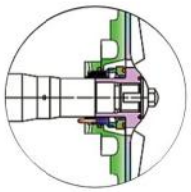

单端面机械密封
Single mechanical seal

泵进出口的连接方式
Application of pump inlet and outlet connection type

液体在管道中会有能量的损失，分为沿程损失和局部阻力损失，管内越光滑，沿程损失越小，弯道越少，管径变化越小，局部阻力损失越小，因而尽量不要采用粗糙的管道连接，也不要在连接中用管道急变的方式连接。

The fluid in pipe will be lose a part of energy that called as "pathway lose" and "local resistance lose", pipe surface is more smooth, pathway lose is more less, and blend of pipe and the change of pipe diameter are moer less, local resisitance lose is more less, thus it is not better by rough surface pipe and by rapid change pipe diameter.

管道直径及连接距离
Pipe diameter and dictance of connection

泵在小流量运行时，效率很低，消耗的能量使液体温度急剧上升，泵在小流量下运行，通过叶轮间隙回流增加，造成泵压力脉动、振动、噪音等危害增加，因而，连接的管道进口直径最好不要小于泵进口直径。为了保证泵运行的更加稳定、泵进口前需要连接一段直管，长度约为5–10倍管道直径。

When low flow rate runing the efficience of pump is very less, consume of energy have fluid temperature rise up rapidly,and when low flow rate runing, the return flow of pump is increased in impeller clearance,the pulsant pressure, shaking,noise from pump etc harm will resait, for the connection diameter of pipe front inlet is not less than design pipe diameter,and it need a straight pipe front inlet, long for 5–10 times pipe diameter, so that keep pump better runing.

错误的连接管道 Wrong pipe type

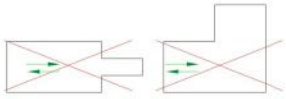

正确的连接管道 Right pipe type

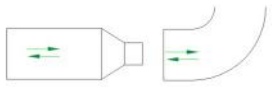

D–02

管道入口连接距离 Pipe connection distance

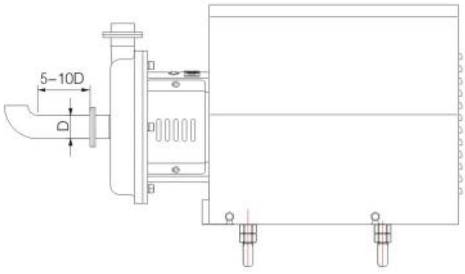

D–03

WWW.CNDONJOY.COM

离心泵(KS系列)
Centrifugal pump (KS series)

WWW.CNDONJOY.COM

KS系列离心泵综合性能曲线图
KS centrifugal comprehensive performance graph

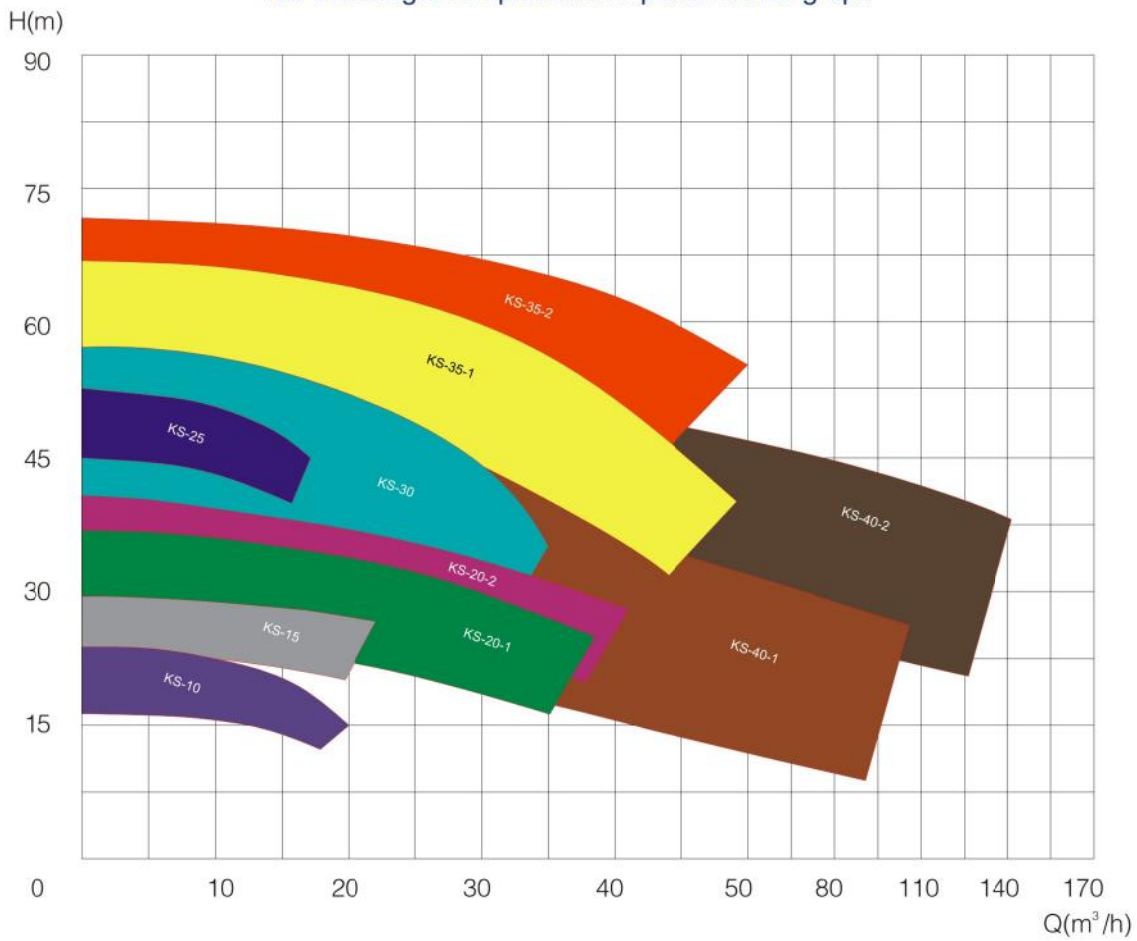

KS带排污口离心泵示意图 KS series pump drainage pipe picture

WWW.CNDONJOY.COM

离心泵(KS系列)
Centrifugal pump (KS series)

KS离心泵订购选型表 KS centrifugal pump selection table

型号 Mocel	选型规格		电机选择	进口/出口
	流量(T)	扬程(M)	功率(KW)*电流(A)	
KS10	3	22	1.5KW	1.5"/1.5"
	5	22	1.5KW	
	8	22	1.5KW	
	9	22	1.5KW	
	12	20	1.5KW	
	15	18	1.5KW	
			2.2KW	
	18	16	2.2KW	
KS15	3	30	1.5KW	2"/1.5"
	5	30	1.5KW	
	8	26	1.5KW	
			2.2KW	
	10	25	2.2KW	
	15	22	2.2KW	
	18	18	2.2KW	
			3.0KW	
	20	16	2.2KW	
			3.0KW	
KS20-1	5	36	2.2KW	2"/2"
			3.0KW	
	10	36	3.0KW	
			4.0KW	
	15	35	4.0KW	
	20	33	4.0KW	
	25	30	4.0KW	
			5.5KW	
	30	30	5.5KW	
	38	22	5.5KW	
KS20-2	20	40	5.5KW	2"/2"
	25	40	5.5KW	
	30	35	5.5KW	
	35	32	5.5KW	
	40	30	7.5KW	
	45	28	7.5KW	
KS25	5	50	4KW/5.5KW	2"/1.5"
	10	45	5.5KW	
	15	40	5.5KW	

型号 Model	选型规格		电机选择	进口/出口
	流量(T)	扬程(M)	功率(KW)*电流(A)	
KS30	5.5KW/10.2A	10	55	2"/1.5"
	5.5KW/10.2A	15	50	
	5.5KW/10.2A	20	50	
	7.5KW/13.6A			
	7.5KW/13.6A	25	45	
	7.5KW/13.6A	30	40	
	7.5KW/14.5A	35	40	
KS35-1	10	70	11KW	2.5"/1.5"
	15	65	11KW	
	20	65	11KW	
	25	60	11KW	
	30	60	11KW	
	35	55	11KW	
	40	50	15KW	
	45	50	15KW	
KS35-2	20	70	15KW	2.5"/2"
	25	70	15KW	
	30	70	15KW	
	35	65	15KW	
	40	65	15KW	
	45	60	18.5KW	
	50	55	18.5KW	
KS40-1	45	42	11KW	3"/2.5"
	50	42	11KW	
	60	40	15KW	
	65	40	15KW	
	70	38	15KW	
	80	35	15KW	
	90	33	15KW	
	100	30	18.5KW	
	110	28	18.5KW	
KS40-2	50	50	15KW	3"/2.5"
	60	48	15KW	
	70	47	18.5KW	
	80	46	18.5KW	
	85	45	22kw	
	90	44	22kw	
	100	43	22kw	
	110	40	22kw	
	120	35	22kw	
	130	30	30KW	
	140	20	30KW	

WWW.CNDONJOY.COM

离心泵KS无防护罩尺寸图 Centrifugal pump without protective cover size fugure

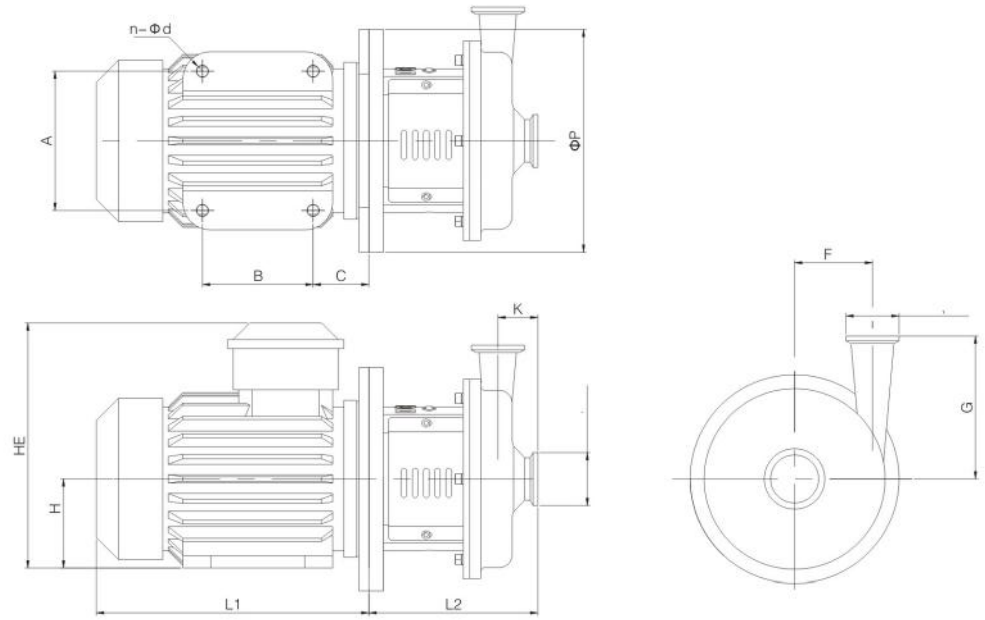

KS泵安装数据表(无罩)
KS pump series installation table(no moter cover)

型号 Model	功率	进口DI	出口DO	PB		A	B	C	H	HE	L1	P	nxd	K	F	G	L2
KS10	1.5KW	1.5"	1.5"	189	Φ32	140	100	56	90	200	260	200	4x10	53	63	129	180
	2.2KW	1.5"	1.5"	189	Φ32	140	125	56	90	200	285	200	4x10	53	63	129	180
KS15	1.5KW	2"	1.5"	250	Φ32	140	100	56	90	200	260	200	4x10	35	90.5	148	203
	2.2KW	2"	1.5"	250	Φ32	140	125	56	90	200	285	200	4x10	35	90.5	148	203
KS20-I KS20-II	2.2KW	2"	2"	250	Φ32	140	125	56	90	200	285	200	4x10	38	85	163	203
	3KW	2"	2"	250	Φ32	160	140	63	100	270	320	250	4x12	38	85	163	216
	4KW	2"	2"	250	Φ32	190	140	70	112	278	335	250	4x12	38	85	163	216
	5.5KW	2"	2"	250	Φ32	216	140	89	132	320	385	300	4x12	38	85	163	216
	7.5KW	2"	2"	250	Φ32	216	140	89	132	320	385	300	4x12	38	85	163	214
KS25	4KW	2"	1.5"	268	Φ32	190	140	70	112	278	335	250	4x12	49	108	183	214
	5.5KW	2"	1.5"	268	Φ32	216	140	89	132	320	385	300	4x12	49	108	183	214
KS30	5.5KW	2"	1.5"	268	Φ32	216	140	89	132	320	385	300	4x12	49	108	183	214
	7.5KW	2"	1.5"	268	Φ32	216	140	89	132	320	385	300	4x12	49	108	183	214
KS35-I	11KW	2.5"	1.5"	350	Φ36	254	210	108	160	400	490	350	4x15	57	131	222	273
	15KW	2.5"	1.5"	350	Φ36	254	210	108	160	400	490	350	4x15	57	131	222	273
KS35-II	15KW	2.5"	2"	350	Φ36	254	210	108	160	400	490	350	4x15	57	131	222	273
	18.5KW	2.5"	2"	350	Φ36	254	254	108	160	400	535	350	4x15	57	131	222	273
KS40-I KS40-II	11KW	3"	2.5"	303	Φ36	254	210	108	160	400	490	350	4x15	61.5	105	202	290
	15KW	3"	2.5"	303	Φ36	254	210	108	160	400	490	350	4x15	61.5	105	202	290
	18.5KW	3"	2.5"	303	Φ36	254	254	108	160	400	535	350	4x15	61.5	105	202	290
	22KW	3"	2.5"	303	Φ36	279	241	121	180	420	560	350	4x15	61.5	105	202	290
	30KW	3"	2.5"	303	Φ36	318	305	133	200	470	660	400	4x19	61.5	105	202	290

注：以上尺寸均以卡箍接头为准。

WWW.CNDONJOY.COM

离心泵(KS系列)
Centrifugal pump (KS series)

KS系列尺寸图 Centrifugal pump dimensions figure

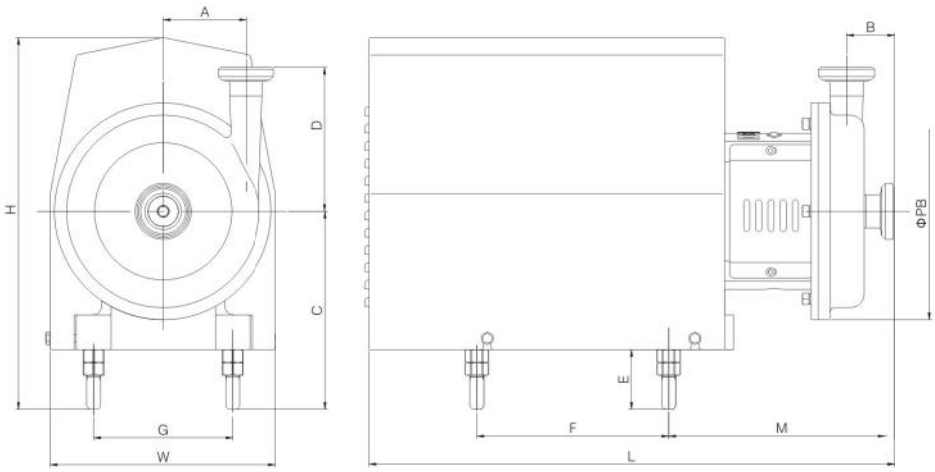

KS离心泵安装尺寸 Centrifugal Pump Open Impeller Series

型号 Model	功率	.	出口	PB		A	B	C	D	M	F	G	H	L	W	E	C	H	E
KS10	1.5KW	1.5"	1.5"	189	Φ32	63	60	190	136	163	240	140	360	528	210	70	222	392	102
	2.2KW	1.5"	1.5"	189	Φ32	63	60	210	136	163	240	140	360	528	210	70	242	392	102
KS15	1.5KW	2"	1.5"	250	Φ32	90.5	42	190	155	186	240	140	360	551	210	70	222	392	102
	2.2KW	2"	1.5"	250	Φ32	90.5	42	210	155	186	240	140	360	551	210	70	242	392	102
KS20-I KS20-II	2.2KW	2"	2"	250	Φ32	85	45	210	170	186	240	140	360	551	210	70	242	392	102
	3KW	2"	2"	250	Φ32	85	45	230	170	175	300	160	430	599	260	70	262	462	102
	4KW	2"	2"	250	Φ32	85	45	222	170	175	300	190	430	599	260	70	254	462	102
	5.5KW	2"	2"	250	Φ32	85	45	252	170	197	330	216	470	737	310	70	284	502	102
	7.5KW	2"	2"	250	Φ32	85	45	252	170	197	330	216	470	737	310	70	284	502	102
KS25	4KW	2"	1.5"	268	Φ32	108	56	222	190	173	300	190	430	597	260	70	254	462	102
	5.5KW	2"	1.5"	268	Φ32	108	56	252	190	195	330	216	470	735	310	70	284	502	102
KS30	5.5KW	2"	1.5"	268	Φ32	108	56	252	190	195	330	216	470	735	310	70	284	502	102
	7.5KW	2"	1.5"	268	Φ32	108	56	252	190	195	330	216	470	735	310	70	284	502	102
KS35-I	11KW	2.5"	1.5"	350	Φ36	131	68	290	229	240	450	254	575	860	375	102	322	607	102
	15KW	2.5"	1.5"	350	Φ36	131	68	290	229	240	450	254	575	860	375	102	322	607	102
KS35-II	15KW	2.5"	2"	350	Φ36	131	68	290	229	240	450	254	575	860	375	102	322	607	102
	18.5KW	2.5"	2"	350	Φ36	131	68	290	229	240	515	254	575	885	375	102	322	607	102
KS40-I KS40-II	11KW	3"	2.5"	303	Φ36	105	73.5	290	213.5	240	450	254	575	870	375	102	322	607	102
	15KW	3"	2.5"	303	Φ36	105	73.5	290	213.5	240	450	254	575	870	375	102	322	607	102
	18.5KW	3"	2.5"	303	Φ36	105	73.5	290	213.5	240	515	254	575	895	375	102	322	607	102
	22KW	3"	2.5"	303	Φ36	105	73.5	310	213.5	240	515	279	625	946	400	102	342	657	102
	30KW	3"	2.5"	303	Φ36	105	73.5	330	213.5	267	580	318	670	1014	440	102	362	702	102

注：以上尺寸均以SMS标准螺纹接头为准。

WWW.CNDONJOY.COM

离心泵性能综合曲线图 KS Series pump performance curve figure

KS–10

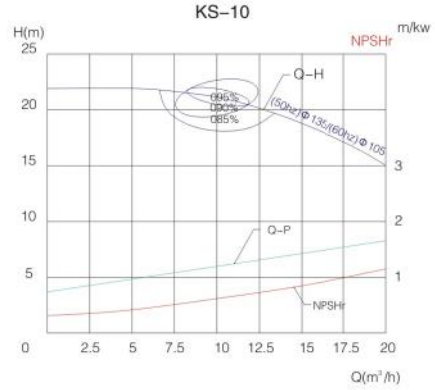

KS–15

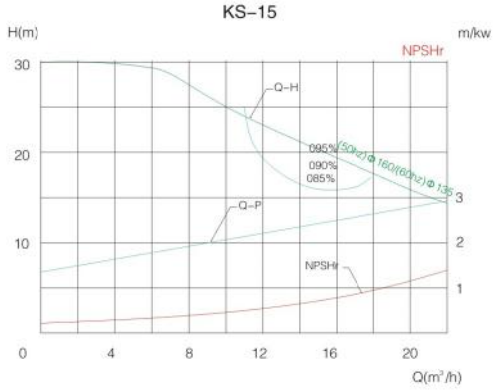

KS–20–1

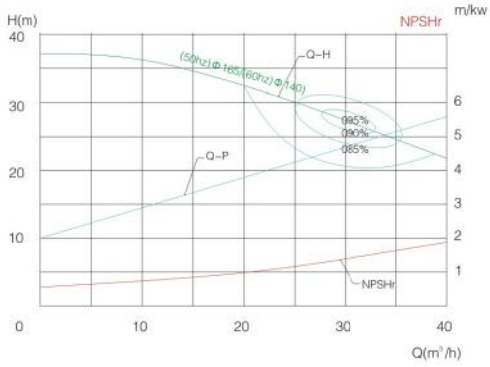

KS–20–2

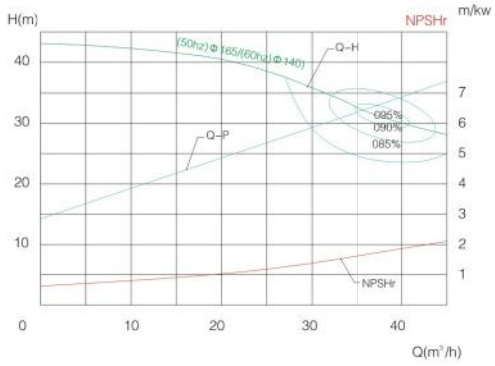

KS–25

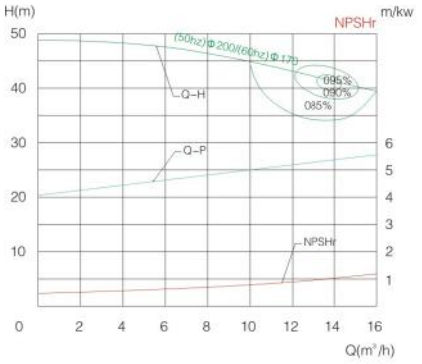

KS–30

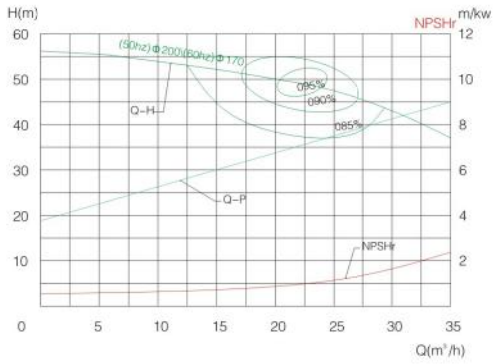

说明：测试条件：介质清水，温度20℃，叶轮转速2900 R.P.M (此曲线图亦适用电机60Hz,叶轮转速3600R.P.M)
Note: Test condition is pure water, 20℃ temperature, impeller speed 2900R.P.M (it is the same curve as motor 60Hz, impeller speed 3600R.P.M)

WWW.CNDONJOY.COM

离心泵(KS系列)
Centrifugal pump (KS series)

KS–35–1

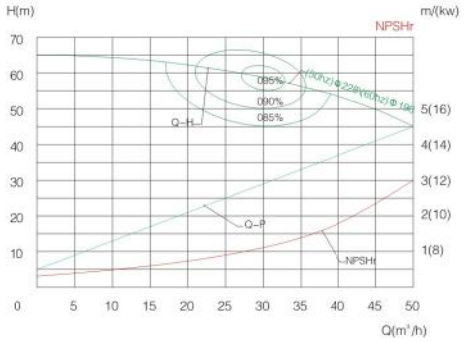

KS–35–2

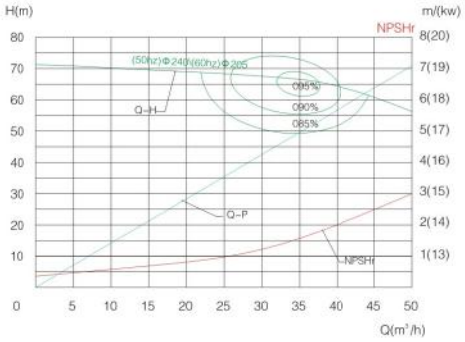

KS–40–1

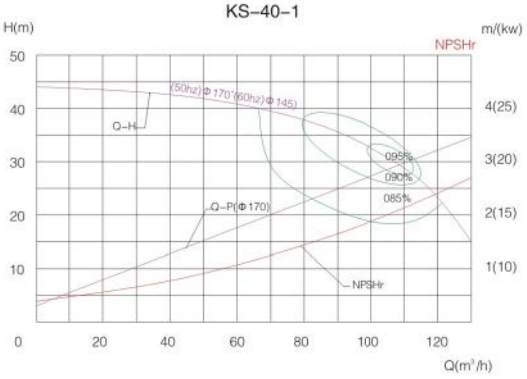

KS–40–2

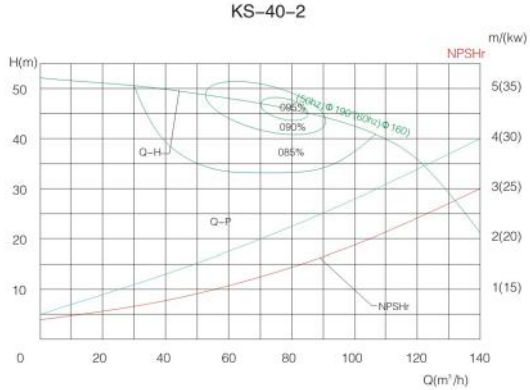

说明：测试条件：介质清水，温度20℃，叶轮转速2900 R.P.M (此曲线图亦适用电机60Hz,叶轮转速3600R.P.M)
Note: Test condition is pure water, 20℃ temperature, impeller speed 2900R.P.M (it is the same curve as motor 60Hz, impeller speed 3600R.P.M)

离心泵型号说明 Model instruction of Centrifugal Pump

KS	10	6T	22	1.5KW	380V	50HZ	M	1.5"/1.5"	S

接口标准：DIN(D),SMS(S),3A(A),RJT(R),ISO/IDF(I)
Connection standard:DIN(D),SMS(S),3A(A),RJT(R),ISO/IDF(I)

进出口规格Inlet & Outlet Size

连接方式：螺纹(M) 卡箍(C)
Connection way:threaded(M), Clamped(C)

电机频率：50HZ；60HZ
Motor frequency: 50HZ;60HZ

电压：110V 220V 380V(详见选型表)
Voltage: 110V 220V 380V(refer to selection table)

电机功率：1.1kw 1.5kw 2.2kw.....
Motor power:1.1kw 1.5kw 2.2kw.....

离心泵扬程(详见选型表)
Discharge head(refer to selection table)

离心泵流量(详见选型表) Flow rate(refer to selection table)

离心泵型号 Model

离心泵代码：开式叶轮KS；闭式叶轮BS
Centrifugal Pump code:KS series(Open impeller)& BS series (Close impeller)

例：KS–10–6T–22–1.5Kw–380V–50HZ–M–2.5"/2.5"–S
Sample:KS–10–6T–22–1.5Kw–380V–50HZ–M–2.5"/2.5"–S

WWW.CNDONJOY.COM

离心泵(BS系列)
Centrifugal pump (BS series)

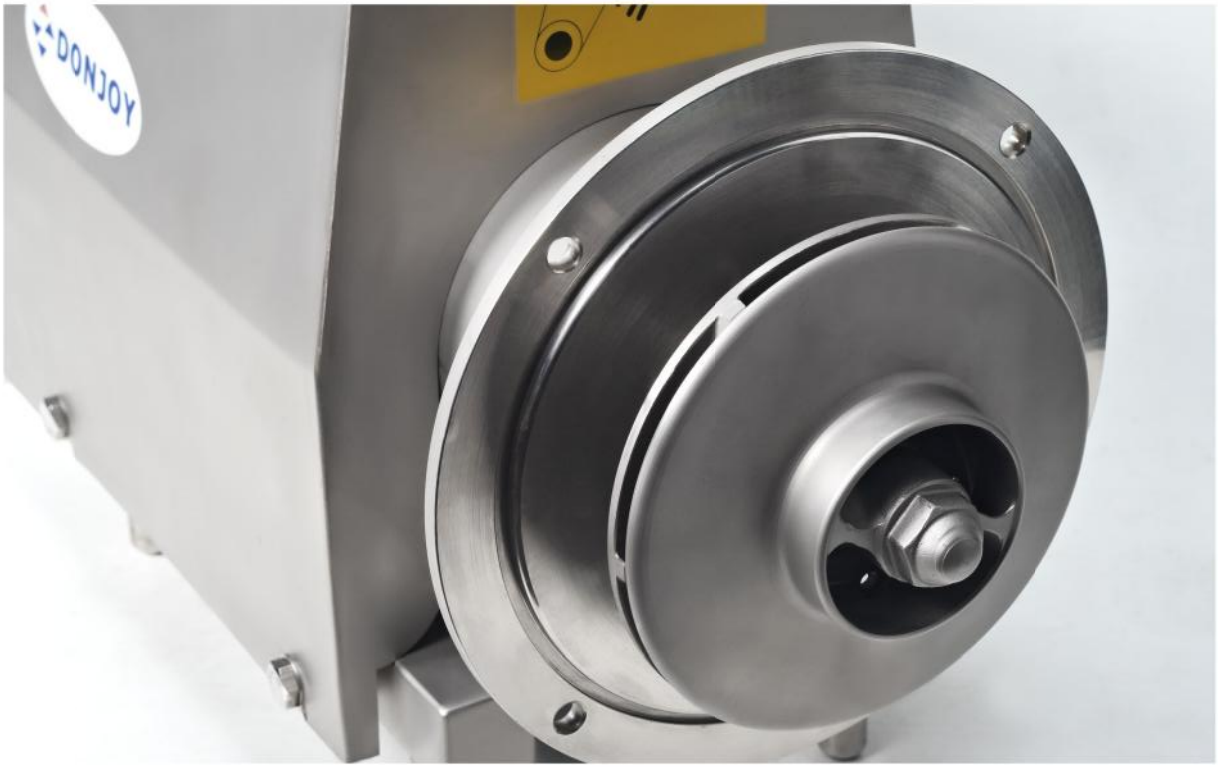

WWW.CNDONJOY.COM

BS系列离心泵 BS Series Centrifugal pump

◆该泵闭式叶轮设计，适用于食品加工、酿酒、饮料等工业领域。
◆该泵为顺时针旋转，即使简单的反转也是禁止的。从电机后面也可以判断旋转方向。
◆该泵通过3A-02-10认证，密封通过FDA.177.2600认证。

◆BS Series centrifugal pump is designed with close impeller, widely used in dairies, beverage, food-processing industry.
◆The correct direction of rotation of this pump is clockwise, it is not allowed to turn reverse rotation.
◆The direction of rotation can be viewed from motor.

电机采用IEC EN IE2高效等级(相当于中国二级能效)，PTC热敏电阻
Motor the IEC EN IE2(Equivalent to China two energy efficiency), PTC thermistor

宽电压电机Wide input range motor

功率(kw) Power	电压备注 Voltage	功率(kw) Power	电压备注 Voltage
0.55		4	
0.75		5.5	
1.1	210V~230V/50HZ	7.5	360V~400V/50HZ
1.5	360V~400V/50HZ	11	630V~690V/50HZ
2.2	420V~460V/60HZ	15	420V~460V/60HZ
3		18.5	
		30	

其他电压和频率电机请与东正联系
Please contact Donjoy for any other voltage or frequency of motor.

技术规格

◆最大流量：40m³/h
◆最高扬程：36H(M)
◆最高转速：3600Min-1
◆最高温度：120℃/248°F(CIP/SIP)
◆与物料接触材质：SS304/316
◆其他部位材质：SS304
◆机械密封：SIC/SIC/EPDM(标准)
◆表面处理：抛光/亚光
◆进出口：卡箍连接(标准)

Technical specifications

◆Max.Flow: 40m³/h
◆Max.Head: 36H(M)
◆Max.Rev: 3600Min-1
◆Max.working temperature: 120℃/248°F(CIP/SIP)
◆Material in contacting with products: SS304/316
◆Other parts: Ss304
◆Mechanical seal: SIC/SIC/EPDM(standard)
◆Surface finish: Mirror or satin polish
◆Inlet & Outlet: Connection Clamp (Standard)

离心泵(BS系列)
Centrifugal pump (BS series)

设计和特点

◆不锈钢电机外罩由冷成型板做成；开式叶轮或闭式叶轮由不锈钢熔模铸造；
◆机械密封根据DIN2946L1K；
◆可调节不锈钢脚；根据3A卫生标准认证；IEC B35电机，IP55，F等级绝缘，50HZ。

Design and features

◆Casing manufactured with cold-formed plate.Open impeller and close impeller manufactured with stainless steel investment casting;
◆Mechanical seal according to DIN 2946L1K;
◆Adjustable stainless steel legs.Pump designed according to 3A sanitary standards; IEC B35 motors, IP55, F-class insulation, 50HZ.

WWW.CNDONJOY.COM

离心泵BS系列选型表(闭式叶轮)
Centrifugal pump BS Series selection table

型号 Model	流量(吨) Flow rate(m^3/h)	扬程 Discharge head(M)	功率 Power(kw)	进/出口规格 Inlet & Outlet Size
BS-2	14	14	0.55kw	1.5"/1.5"
	16	16	0.75KW	1.5"/1.5"
	24	24	1.1KW	1.5"/1.5"
	18	18	1.1KW	1.5"/1.5"
BS-4	20	20	1.5KW	2"/1.5"
	24	24	1.5KW	2"/1.5"
	18	18	1.5KW	2"/1.5"
	20	20	1.5KW	2"/1.5"
BS-6	30	30	2.2KW	2"/1.5"
	24	24	2.2KW	2"/1.5"
	30	30	2.2KW	2"/1.5"
	18	18	2.2KW	2"/1.5"
	20	20	2.2KW	2"/1.5"
	16	16	2.2KW	2"/1.5"
BS-8	36	36	3.0KW	2"/1.5"
	24	24	3.0KW	2"/2"
	24	24	3.0KW	2"/2"
BS-10	30	30	4.0KW	2"/2"
	36	36	4.0KW	2"/2"
	30	30	4.0KW	2"/2"
BS-12	36	36	5.5KW	2"/2"
	24	24	5.5KW	2.5"/2"
	30	30	5.5KW	2.5"/2"
	36	36	7.5KW	2.5"/2"
	24	24	7.5KW	2.5"/2"

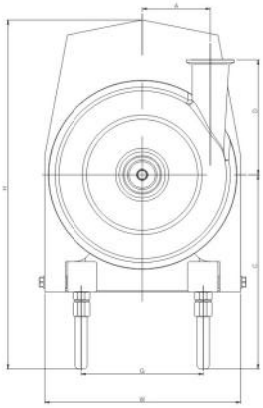

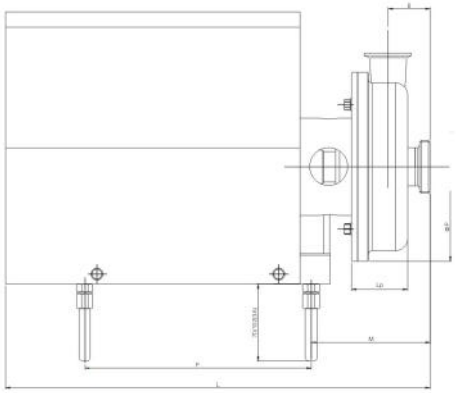

以下表格数据仅供参考，实际尺寸以实物为准。

Attention:Please refer to selection table for details of nest page,the size in the following form is the feference value, the actual size is subjected to actual object.

BS系列泵安装尺寸图 BS Series pump installation dimension drawing

	泵头规格Pump Dimension						外形安装尺寸Assembly Dimension										3A标准	
	功率 Power (kw)	进口 Inlet d"/DN	出口 Outlet d"/DN	ϕP	Lp	机械密封 Mechanical seal size	A	B	C	D	M	F	G	H	L	W	C	H
BS-2	0.75	1.5"/40	1.5"/40	174	68	22	56	51	200	136	162	203	125	370	489	210	212	402
	1.1	1.5"/40	1.5"/40	174	68	22	56	51	200	136	162	203	125	370	489	210	212	402
BS-4	1.5	2"/50	1.5"/40	215	75	22	76	59	190	151	174	240	140	360	539	210	222	392
	2.2	2"/50	1.5"/40	215	75	22	76	59	190	142	174	240	140	360	539	210	222	392
BS-6	2.2	2"/50	1.5"/40	234	83	22	86	70	190	173	188	300	160	420	553	260	242	452
	3	2"/50	1.5"/40	234	83	22	86	70	230	173	180	300	160	420	579	260	242	452
BS-8	3	2"/50	2"/50	243	85	22	86	70	230	173	180	300	190	430	579	260	244	462
BS-10	4	2"/50	2"/50	243	85	22	86	70	222	173	187	300	190	430	606	260	244	462
BS-12	5.5	2"/50	2"/50	243	85	22	86	70	242	167	216	330	216	460	755	310	274	492
	7.5	2.5"/65	2"/50	243	85	22	86	70	242	167	216	330	216	460	755	310	274	492

选项

◆泵头低排放：隔膜阀/球阀/蝶阀
◆机械密封：SIC/SIC/EPDM
◆进出口：螺纹/焊接/法兰

Options

◆Low discharge in the pump head:
Diaphragm valve/ball valve/butterfly valve
◆Mechanical seal: SIC/SIC/EPDM
◆Connection way of Inlet & Outlet: Thread, Weld, Flange

WWW.CNDONJOY.COM

离心泵(BS系列)
Centrifugal pump (BS series)

BS系列离心泵性能曲线图BS Series pump performance curve figure

说明：测试条件：介质清水，温度20℃，叶轮转速2900 R.P.M
Note: Test condition is pure water, 20℃ temperature, impeller speed 2900R.P.M

BS–2

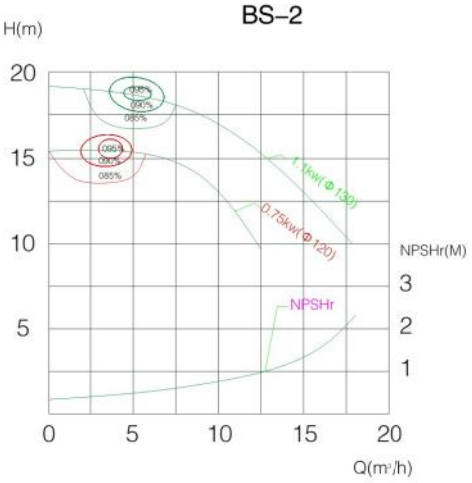

BS–4

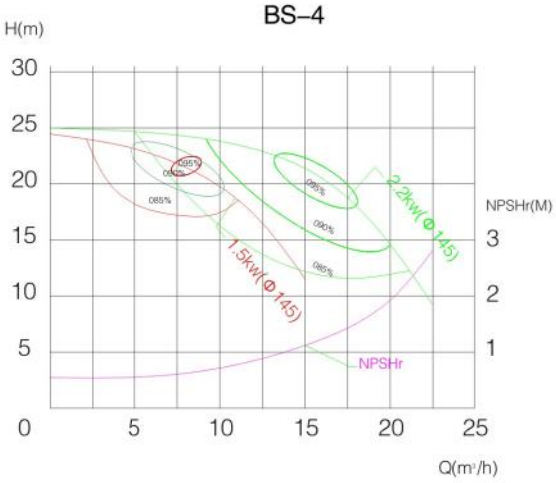

BS–6

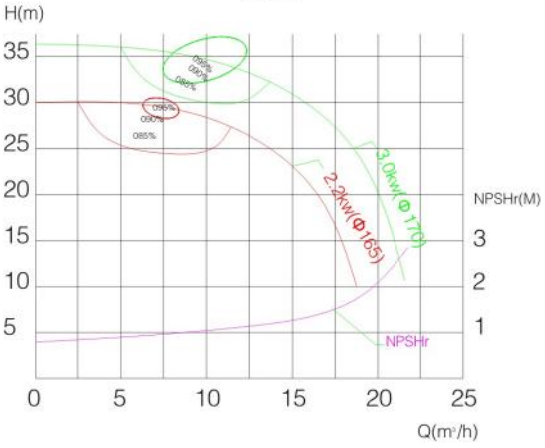

BS–8

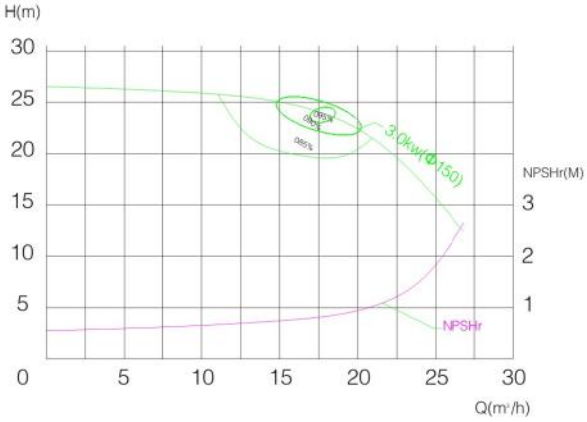

BS–10

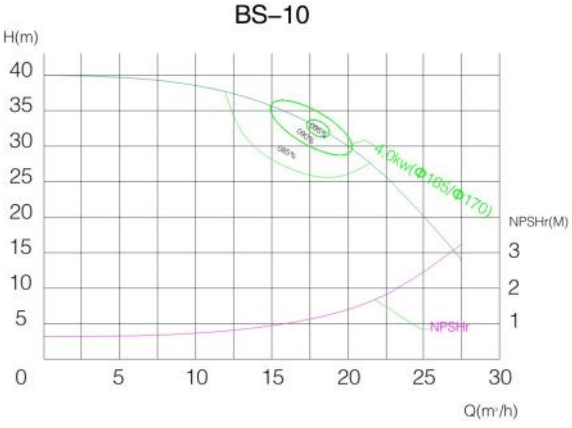

BS–12

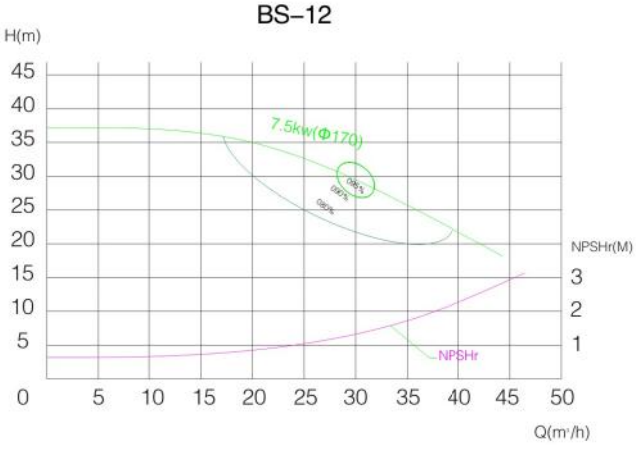

WWW.CNDONJOY.COM

自吸泵(CIP泵)
Self-priming pump(CIP pump)

应用

◆该泵为卫生设计侧槽，自吸的泵，适用于食品加工，制药和化学工业中。
◆它专为设计于用于抽吸含有空气或气体的物料，它也可以被用于带优先帛吸及过滤设备的负吸入中。
◆它可用于酒、油、糖浆、挥发物、如酒精、丙酮槽和其他溶剂，或是温度临近沸点的其他物料。但是，该泵的主要用途是用于CIP的回收。

工作原理

◆叶轮安置在入口泵体的文氏管套之间，它和泵轴装配起来旋转。
◆叶轮的旋转和侧槽的排列，在进口泵体内创造了一个负压，因而产生了泵的吸力。
◆同时，液体以动能和压能的形式接收能量，从而推动它流经叶轮盖。

设计和特点

◆电机外罩由冷成型板做成
◆不锈钢熔模铸造进口泵体和叶轮
◆机械密封圈可以阻止弹簧和被抽吸兴体之间的接触
◆不锈钢机架
◆表面处理：喷砂处理

Applications

◆The pump is a sanitary lateral design self priming pump, it's suitable for food processing, pharmacy and chemical industry.
◆It is specially designed for pumping materials containing air or gas,and it can also be used for negative sution with prior priming as well as with filtration equipment.
◆It can be used for wine,oil,syrups,volatile products such as alcohol,acetone and other solvents, or with products at temperatures close to boiling point.However, the main use of this pump is for CIP recover.

Operating principles

◆The impeller is housed between the inlet body and the venturi casing and it rotates in conjunction with the pump shaft.
◆The rotation of the impeller and arrangement of the side channel, creates a negative pressure inside the inlet body.
◆Which generates the suction force of the pump.At the same time, the fluid recives energy in the form of kinetic energy and pressure eneygy,and this impels it through the impeller casing.

Design and features

◆Motor cover manufactured with cold-formed plate
◆Stainless steel investment casting inlet body and impeller
◆Mechanical seal prevents contacting between the spring and the pumped fluid
◆Stainless steel support
◆Surface finish: Sandblast

WWW.CNDONJOY.COM

自吸泵(CIP泵)
Self-priming pump(CIP pump)

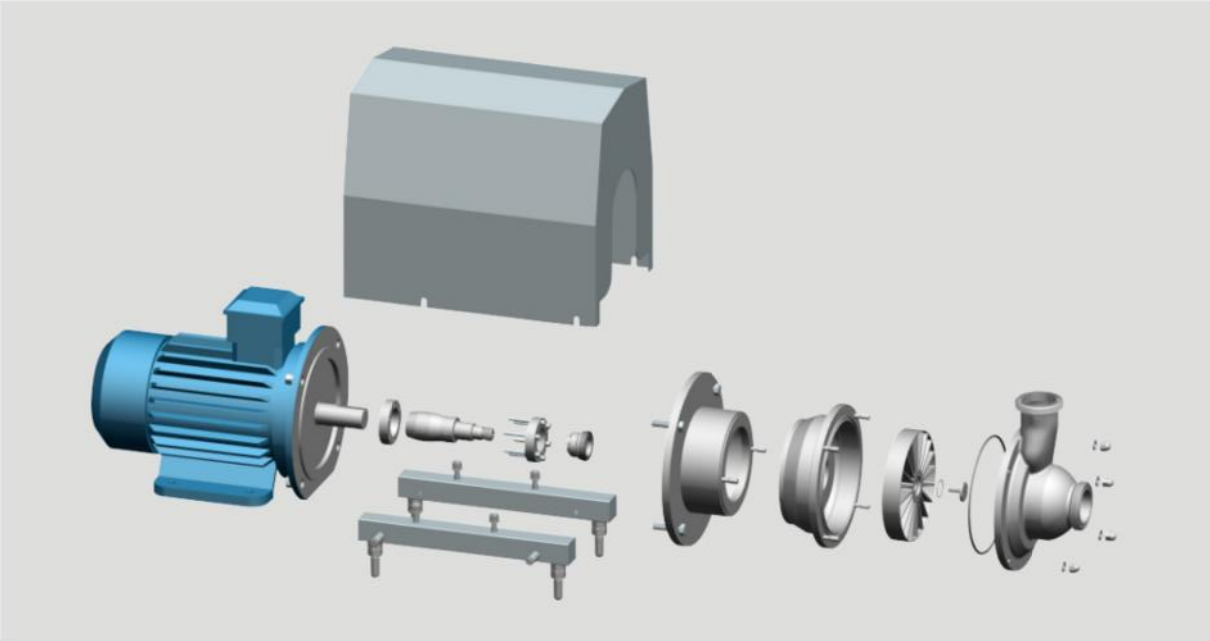

技术规格

◆最大流量：30m³/h/132GPM
◆最高扬程：30H(M)
◆最大压力：3Bar/43 PSI
◆最高温度：120℃/248°F
◆最高转速：1750Min−1
◆最大吸程：8m/22ft

材质Materials

◆与物料接触部位：AISI−316/304
◆其他部分：AISI−304
◆垫圈(标准)：EPDM(FDA)
◆机械密封圈(标准)：SIC/SIC/EPDM

◆Parts in contact with pumped media: AISI−316/304
◆Other parts: AISI−304
◆Gaskets (standard): EPDM(FDA)
◆Mechanical seal(standard)：SIC/SIC/EPDM

选项Options

◆机械密封圈：C/SIC/EPDM
◆垫圈：FPM(Viton)NBR
◆进出口连接：卡箍、螺纹、法兰、DIN、SMS、3A、RJT

◆Mechanical seal in: C/SIC/EPDM
◆Gaskets in: FPM(Viton)NBR
◆Inlet & Outlet connections: Clamp, Male, Flange, DIN, SMS, 3A, RJT

Technical specifications

◆Max.Flow: 30m³/h/132GPM
◆Max.Head: 30H(M)
◆Max.pressure: 3Bar/43 PSI
◆Max.operating temp: 120℃/248°F
◆Max.rev: 1750Min−1
◆Max.suction height: 8m/22ft

电机采用IEC EN IE2高效等级(相当于中国二级能效)，PTC热敏电阻
Motor the IEC EN IE2(Equivalent to China two energy efficiency), PTC thermistor

宽电压电机规格表

功率(kw) Power	电压备注 Voltage	功率(kw) Power	电压备注 Voltage
0.75	210V~230V/50HZ	4	360V~400V/50HZ
1.1	360V~400V/50HZ	4.5	630V~690V/50HZ
1.5	420V~460V/60HZ	7.5	420V~460V/60HZ
2.2		11	
3		15	

WWW.CNDONJOY.COM

安装尺寸图 Assembly Dimension

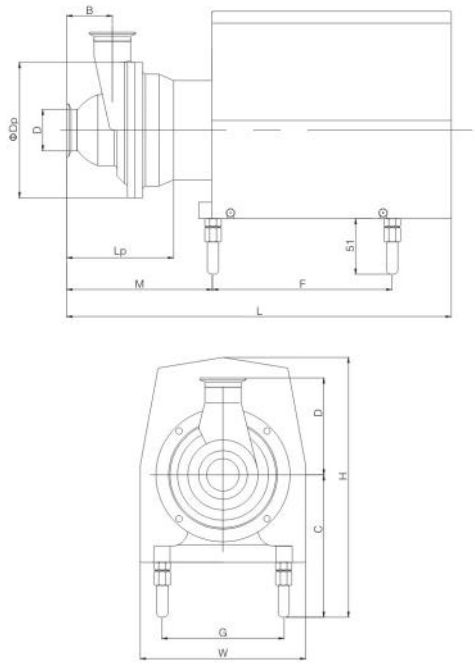

型号 Model	泵头尺寸Pump Specifition						外形安装尺寸Assembly Dimension									3A标准	
	功率 Power (kw)	进口 Inlet d"/DN	出口 Outlet d"/DN	ΦDp	Lp	机械密封 mechanic seal size	B	C	D	M	F	G	H	L	W	C	H
CIP-B04	2.2	2"/50	1.5"/38	192	160	Φ32	73	230	142	207	300	160	430	626	260	262	430
CIP-B08	3	2"/50	2"/50	192	160	Φ32	73	230	142	207	300	160	430	626	260	262	430
CIP-B10	4	2.5"/63	2.5"/63	248	204	Φ32	83.5	210	185	274	300	190	422	693	260	226	436
CIP-B20	5.5	2.5"/63	2.5"/63	248	206	Φ32	83.5	242	185	282	330	216	460	772	310	274	460
CIP-B30	7.5	3"/76	3"/76	248	206	Φ32	83.5	242	185	282	330	216	460	772	310	274	460

注意：详细选型详见选型表；以下表格里的尺寸为参考值，实际尺寸以实物为准。
Attention: Please refer to selection table for details of next page, The size in the following form is the reference value, the actual size is subjected to actual object.

WWW.CNDONJOY.COM

自吸泵(CIP泵)
Self-priming pump(CIP pump)

自吸泵性能曲线图 Self-priming pump performance graph

CIP-04/08

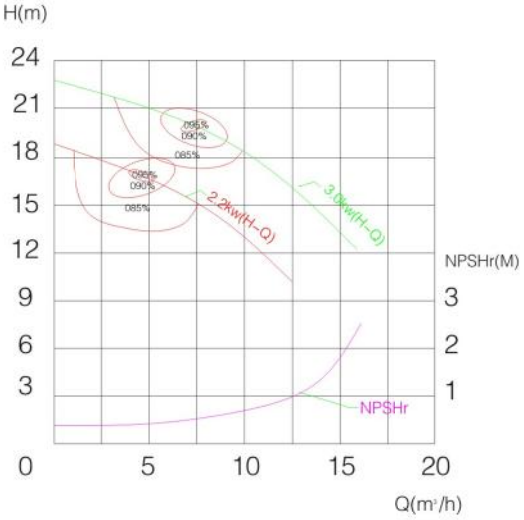

CIP-10/20/30

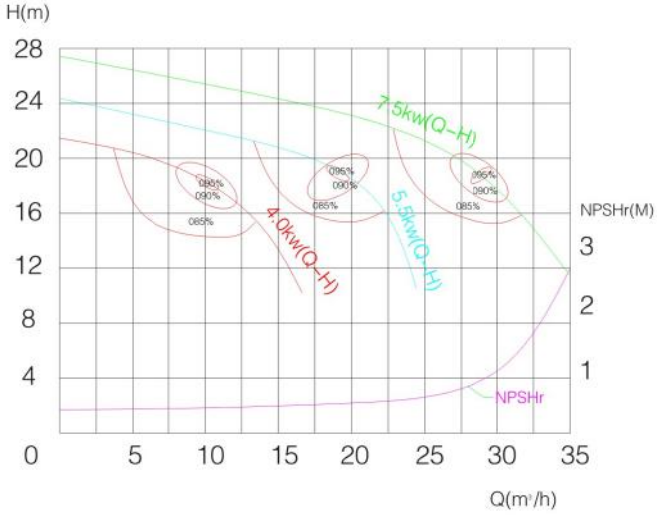

说明:介质清水,温度20℃，叶轮转速1450 R.P.M

Note: Test condition is pure water, 20℃ temperature, impeller speed 1450R.P.M

自吸泵选型表
Self-priming Pump selection table

型号 Model	流量(吨) Flow rate(m^3/h)	扬程 Discharge head(M)	功率 Power(kw)	进/出口 Inlet & Outlet
CIP-B04	4	24	2.2KW	2"/1.5"
CIP-B08	7	24	3KW	2"/2"
CIP-B10	10	24	4KW	2.5"/5"
CIP-B20	20	24	5.5KW	2.5"/2.5"
CIP-B30	30	24	7.5KW	3"/2.5"

WWW.CNDONJOY.COM

自吸泵型号说明 Model instruction of Self–priming pump

CIP	B10	10T	24	4KW	380V	50HZ	M	2.5"/2.5"	S

- S — 接口标准：DIN(D),SMS(S),3A(A),RJT(R),ISO/IDF(I)
  Connection standard:DIN(D),SMS(S),3A(A),RJT(R),ISO/IDF(I)
- 2.5"/2.5" — 进出口规格Inlet & Outlet Size
- M — 连接方式：螺纹(M) 卡箍(C)
  Connection way:threaded(M), Clamped(C)
- 50HZ — 电机频率：50HZ；60HZ
  Motor frequency: 50HZ;60HZ
- 380V — 电压：110V 220V 380V(详见选型表)
  Voltage: 110V 220V 380V(refer to selection table)
- 4KW — 电机功率：1.1kw 1.5kw 2.2kw.....
  Motor power:1.1kw 1.5kw 2.2kw.....
- 24 — 扬程(详见选型表)Discharge head(refer to selection table)
- 10T — 流量(详见选型表) Flow rate(refer to selection table)
- B10 — 型号 Model
- CIP — 泵代码 Centrifugal Code

例：CIP–B10–10T–24–4Kw–380V–50HZ–M–2.5"/2.5"–S
Sample:CIP–B10–10T–24–4Kw–380V–50HZ–M–2.5"/2.5"–S

WWW.CNDONJOY.COM

自吸泵(CIP+)
Self-priming pump(CIP+)

应用

◆该泵设计前导叶轮，降低泵的必需气蚀余量，自吸的泵，适用于食品加工，制药和化学工业中。
◆泵进出口设计有旁路管道。
◆它专为设计于用于抽吸含有空气或气体的物料，它也可以被用于带优先帛吸及过滤设备的负吸入中。
◆它可用于酒、油、糖浆、挥发物、如酒精、丙酮槽和其他溶剂，或是温度临近沸点的其他物料。

Applications

◆The pump is a sanitary lateral design self priming pump, it's suitable for food processing, pharmacy and chemical industry.
◆The pump is desighed a side way pipe between inlet and outlet.
◆It is specially designed for pumping materials containing air or gas,and it can also be used for negative sution with prior priming as well as with filtration equipment.
◆It can be used for wine, oil, syrups, volatile products such as alcohol, acetone and other solvents, or with products at temperatures close to boiling point.

工作原理

◆诱导叶轮安装在进口端，改善液体进口的最低压力，改变进口液流速度，提高泵的抗汽蚀余量性能。
◆同时，旁路管道出口液体能补充到进口，启动时液体能循环使用，从而达到自吸功能。

Operating principles

◆The abduction impeller is desighed pump inlet,can improve inlet liquid presure, and change inlet liquid speedx, increare pump NPSH capability.
◆And outlet liquid through side way pipe supplenment inlet, circulation work, so that pump may take into self suck.

WWW.CNDONJOY.COM

技术特点

◆最高扬程：70/M
◆最高温度：130℃
◆低噪音
◆温和的物料输送不损伤
◆连接方式：卡箍、螺纹、法兰等，
DIN、SMS、RJT、ISO、IDF、ASME BPE
◆机封设计：单机封(标准)，双机封(选项)，SIC/C(标准)，
SIC/SIC(选项)
◆卫生认证：3A-02-10，CE-MD-06/42/EC，FDA177.2600，
符合EHEDG，GMP要求

Technical features

◆Maximum lift: 70/M
◆Maximum temperature: 130℃
◆Low noise
◆Gentle material handling without damage
◆Connection: clamp, threaded, flange, DIN/SMS/RJT/ISO/IDF
/ASME BPE
◆Mechanical seal design: single seal(standard), double
mechanical seal(option), SIC/C(standard), SIC/SIC(option)
◆Health certification: 3A-02-10, CE-MD-06/42/EC,
FDA177.2600, meets EHEDG, GMP requirements

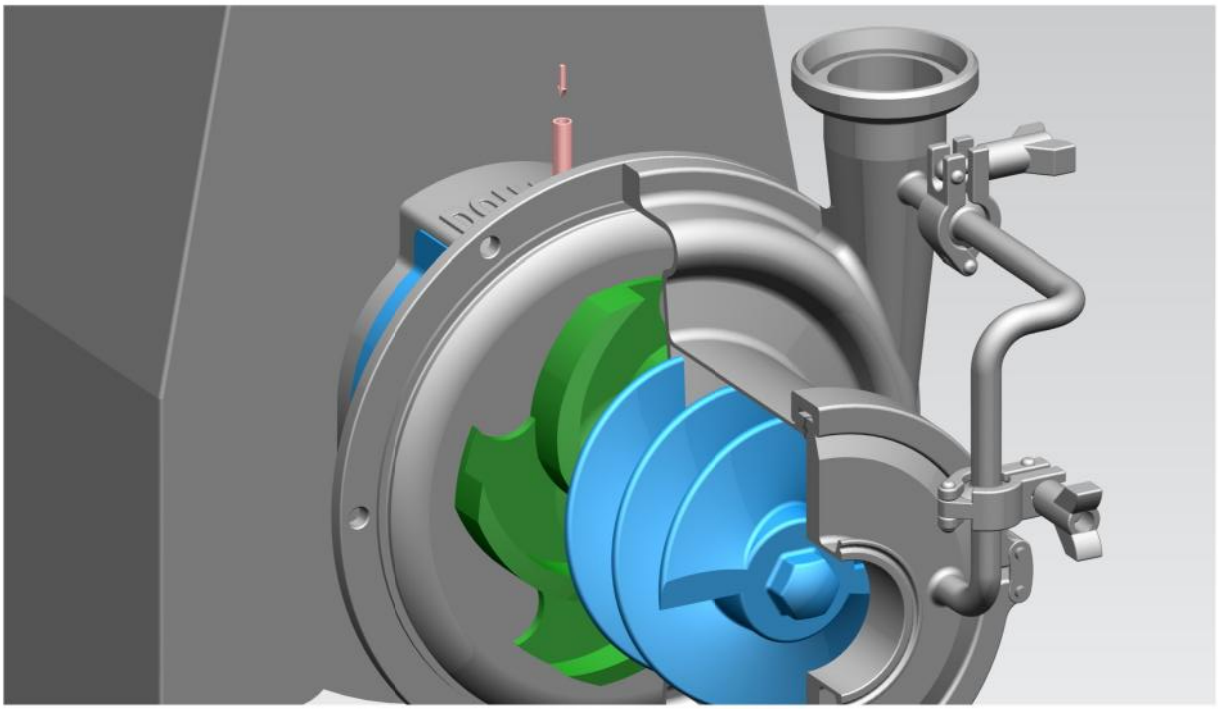

WWW.CNDONJOY.COM

自吸泵(CIP+)
Self-priming pump(CIP+)

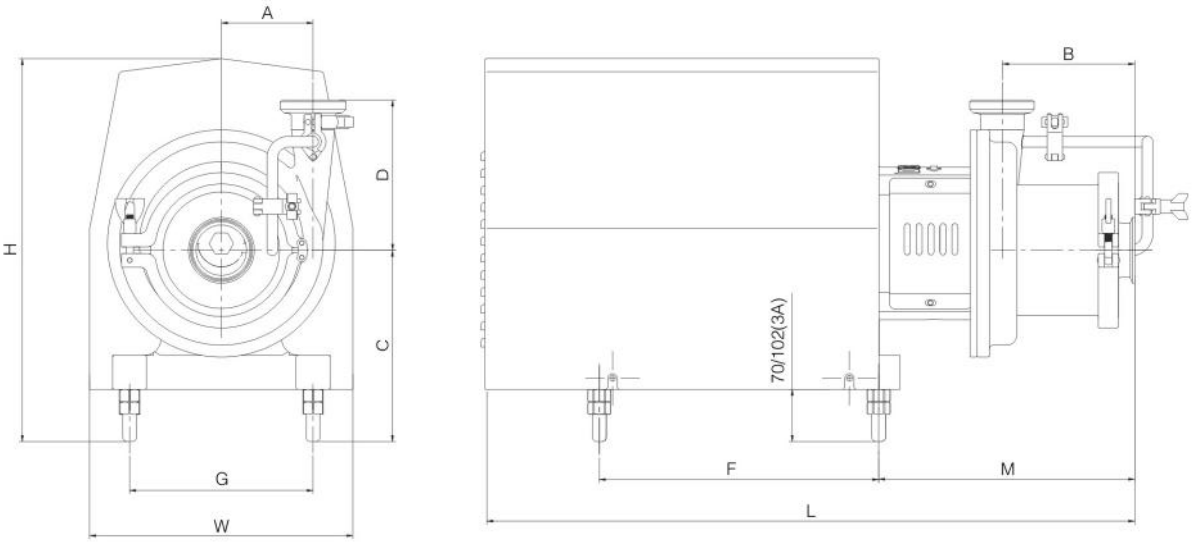

CIP+系列尺寸图(以下尺寸基于SMS标准螺纹接口)
CIP+Series installation dimesion table(the date is based on SMS thread union)

CIP+	泵头尺寸Pump Specifition			外形安装尺寸Assembly Dimension										3A标准	
	功率 Power (kw)	进口 Inlet d"/DN	出口 Outlet d"/DN	A	B	C	D	M	F	G	H	L	W	C	H
CIP+10	1.5	1.5"/40	1.5"/40	90.5	155	182	163	261	240	140	360	617	210	214	392
	2.2	1.5"/40	1.5"/40			202		262	240	140	360	617	210	234	392
CIP+20	3	2"/50	2"/50	85	145	222	178	271	300	160	430	692	260	254	462
	4	2"/50	2"/50			214		279	300	190	430	698	260	246	462
CIP+30	4	2"/50	1.5"/40	108	198	214	166	281	300	190	430	690	260	246	462
	5.5	2.5"/50	2.5"/50			244		296	330	216	470	826	310	276	502
	7.5	2.5"/65	2.5"/50			244		299	330	216	470	826	310	276	502
CIP+40	11	2.5"/65	2.5"/65	131	190	280	239	335	450	254	575	966	375	312	607
	15	3"/80	2.5"/65			280		336	450	254	575	966	375	312	607
	18.5	3"/80	2.5"/65			280		334	515	254	575	1021	375	312	607

WWW.CNDONJOY.COM

CIP+系列自吸泵选型表
CIP+Self–priming Pump selection table

型号 Model	功率 Power(kw)	流量 Flow rate (m^3)	扬程 Discharge head(M)	进口 Inlet d"/DN	出口 Outlet d"/DN
CIP+10	1.5	3	26	2"/50	1.5"/40
	2.2	8	22	2"/50	1.5"/40
		12	18	2"/50	1.5"/40
CIP+20	3	15	18	2"/50	2"/50
		18	12	2"/50	2"/50
	4	12	30	2"/50	2"/50
		15	25	2"/50	2"/50

型号 Model	功率 Power(kw)	流量 Flow rate (m^3)	扬程 Discharge head(M)	进口 Inlet d"/DN	出口 Outlet d"/DN
CIP+30	5.5	10	40	2"/50	2"/50
		15	30	2"/50	2"/50
	7.5	22	40	2"/50	2"/50
CIP+40	11	20	55	2.5"/65	2.5"/65
		25	50	2.5"/65	2.5"/65
	15	35	45	3"	2.5"/65
		41	42	3"	2.5"/65
	18.5	40	50	3"	2.5"/65

CIP+自吸泵性能曲线图 CIP+priming pump performance graph

CIP+10

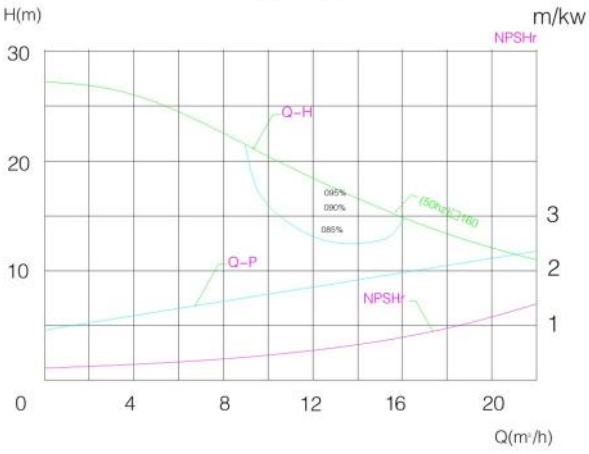

CIP+20

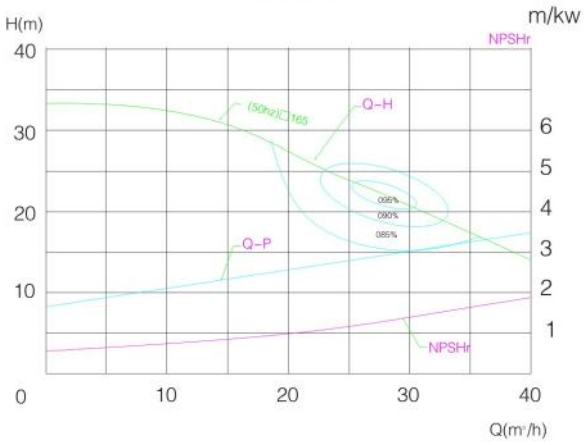

CIP+30

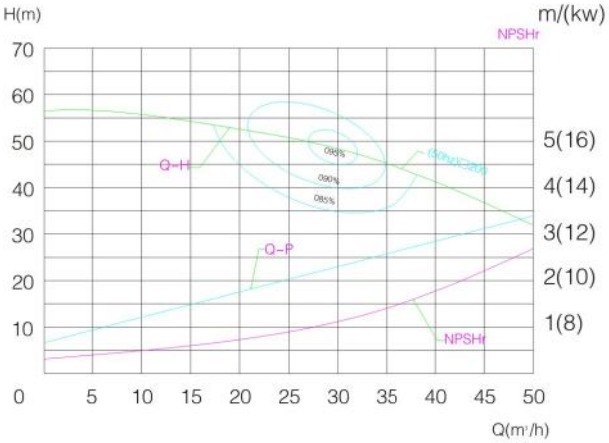

CIP+40

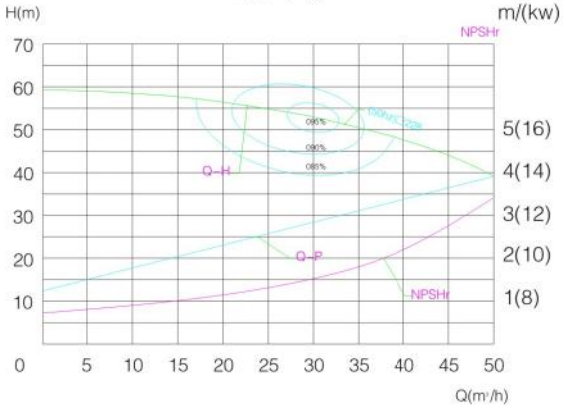

说明：测试条件：介质清水，温度20℃，叶轮转速2900 R.P.M (此曲线图亦适用电机60HZ，叶轮转速3600 R.P.M)
Note: Test condition is pure water, 20℃ temperature, impeller speed 2900R.P.M(it is the same curve as motor 60Hz, impeller speed 3600R.P.M)

WWW.CNDONJOY.COM

混合器(混合泵)
Blender(mixing pump))

应用

◆该混合器是用于将固体混合到液体中。
◆在食品加工工业中，该混合器为奶粉的配制，糖浆的制作，盐水的调制等提供了在线处理完美的解决办法。
◆在制药，化妆品和化学制品行业中，它也可以用于预备固体和液体的混合。

Applications

◆The Mixers are used to mix solids in liquids.
◆In the food-processing industry, they provide a perfect solution for reconstituting powdered milk,making syrups, preparing brines,etc.
◆They can also be a solution for preparing solid-liquid mixtures in the pharmaceutical, cosmetics and chemical industries.

材质

◆与物料接触部位：AISI-316L，AISI-304
◆垫圈(标准)：EPDM根据FDA
◆机械密封圈(标准)：SIC/SIC/EPDM
◆内表面处理：镜面抛光Ra≤0.8μm
◆外表面处理：镜面抛光

Materials

◆Parts in contact with the media: AISI-316L，AISI-304
◆Gaskets(standard): EPDM according to FDA
◆Mechanical seal (standard): SIC/SIC/EPDM
◆Inside finish: mirror polished,Ra≤0.8μm
◆Outside finish: mirror polished

设计和特点

◆简单和垂直的装配可以快速的均匀的混合各种固体，而不会和空气接触完全混合带物料的再流通在一些应用中，它可以成一直线的使用，无需再流通。
◆根据3A卫生标准设计
◆通过卡箍连接可以简单装配和拆卸
◆不用拆卸可以进行清洗
◆卫生单机械密封圈

Design and features

◆Simple and versatile assembly for quick and homogeneous mixing of a great variety of solids without contact with the air. Complete mixing with recirculation of the material. In some applications, it can be used in line, without recirculation.
◆3A Sanitary design.
◆Easy assembly and disassembly by Clamp connections.
◆Cleaning can be carried out without disassembling the unit.
◆Sanitary single mechanical seal.

WWW.CNDONJOY.COM

设计和特点 Design and features

◆该混合器最基本包括外套和一个垂直安装的离心泵叶轮。吸入侧有一个料斗和套管，用于将固体进口和液体分离开来，从而避免了物料进入外套之前就形成絮状物。
◆液体以高速度进入混合腔，因此在叶轮的中心产生了真空，从而吸入了固体。固体的进入方式可以通过安装在加料斗下面的阀门来进行控制。在混合器吸入和排出的侧边保持低压非常重要。避免气穴现象。因此只有当应用确实需要时，才提供输送泵(大量的出口压力会降低吸入固体，高粘度物料等)，请一定要记住，吸入容量会减少。
◆当出口压力很高时，需要安装一个离心泵来排泄混合器侧边。
◆当黏度超过500CP时，输送泵和排泄泵必须是正位移泵(转子泵)。

◆The mixer basically consists of a casing and a centrifugal pump impeller which is mounted vertically.The suction side has a double-wall tube that keeps the inlet of solids separate from that of liquids, thus avoiding the formation of flocs before the material enters the casing.
◆The liquid enters the mixing chamber at a high velocity,thereby creating a vacuum on the center of the impeller, which causes the suction of the solids can be regulated by means of a valve situated at the bottom of the hopper.It is important to keep low pressure at the suction and at the dishcrage sides of the blender. Avoid cavitation. Thus a feeding pump must be provided only for the applications that really require it (considerable pressure drops at the suction side,high viscosity products, etc.),Please, keep in mind that the suction capacity will decrease.
◆When outlet pressure is high, a centrifugal pump needs to be fitted to the discharge side of the blender.
◆For viscosities above 500 CP,the feeding pump and the discharge pump must be positive displacement lobe pumps.

选项Options

◆可冲洗双重冷却机械密封
◆连接：DIN，SMS，3A
◆气动阀门
◆60°加料斗
◆混合室内筛子
◆排泄装置

◆Double mechanical seal with cooling system
◆Connections: DIN, SMS, 3A
◆Pneumatic actuator valve
◆60° Hopper
◆Screen in the mixing chamber
◆Drainage

WWW.CNDONJOY.COM

混合器(混合泵)
Blender(mixing pump))

应用

◆配制糖浆，山梨醇，葡萄糖，乳糖和派生物
◆配制奶粉
◆溶解可可粉或糖于牛奶中
◆配制乳浆
◆配制面粉和淀粉浆
◆配制盐水
◆预混酸奶酪和其他乳制甜点
◆溶解斑脱土用于洒过滤
◆溶解酪蛋白和奶酪制作工业中的酪蛋白
◆配制杀虫剂和肥料

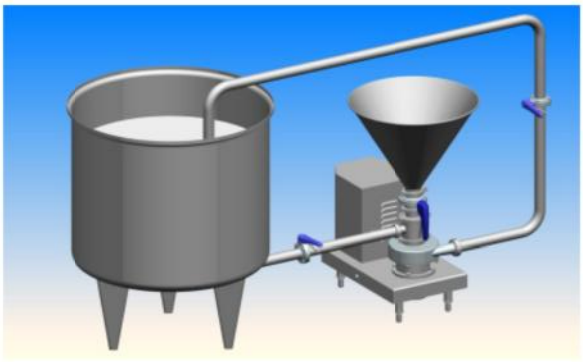

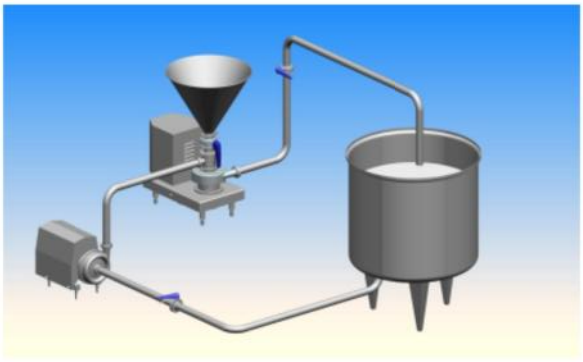

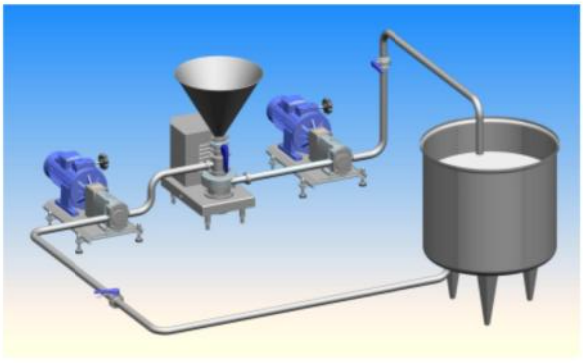

Appliations

◆Preparation of sugar syrup,sorbitol, glucose, lactose and derivatives
◆Reconstitution of powdered milk
◆Dissolution of cocoa and/or sugar in milk
◆Reconstitution of powdered whey
◆Preparation of flour and starch slurries
◆Preparation of brines
◆Pre-mixtures of yogurt and other milk-based desserts
◆Dissolution of bentoites for wine filtering
◆Dissolution of casein and caseinates in the cheese-making industry
◆Preparation of pesticiddes and fertilizers

典型应用1

能够实现对多种粉类制品的快速溶解，主要处理固形物含量不超过15%的溶液的制作。通常使用在奶粉，果胶，添加剂，蔗糖等物料的快速溶解过程中。

Typical Application 1

Can be achieved on fast-dissolving of a variety of powder product, dealing mainly with the solution which with solid contednt not more than 15%. Usually used in the rapid dissolution process of milk powder, pectin, additives,sugar and other materials.

典型应用2

在料液混合机与配料罐间增加了一台离心泵的目的是为了给料液混合机供料，这种配置能够处理固形物含量比较大的溶液，通过离心泵产生的高速液体加速干粉的溶解效果。应用在最终溶液中固形物含量在25%以下的溶液的处理中。

Typical Application 2

Increasing a centrifugal pump between Mixer and make-up tank is in order to feed mixer expected, this configuration can handle relatively high solid content of solution, high-speed liquid through the centrifugal accelerates solution processing of dry powder. Mainly used in the processing of final solution with solids content of 25% or less.

典型应用3

这个系统中配备了2台转子泵，转子泵在输送含有粘度的物料过程中具有比较大的优势，并且具有比较高的压力，这个系统是专门为处理混合高固形含量的溶液而设计的，特别是在处理固形物含量达到50%以上的溶液的混合处理中具有很好的应用。

Typical Application3

This system is equipped with two sets of rotor pumps;rotor pump has relatively large advantage in the process of delivery of materials containing the viscosity, and has a relatively high pressur. This system is designed to handle high solids content of mixed solution, especially perfect in dealing with the solution with solids content of 50% or more.

WWW.CNDONJOY.COM

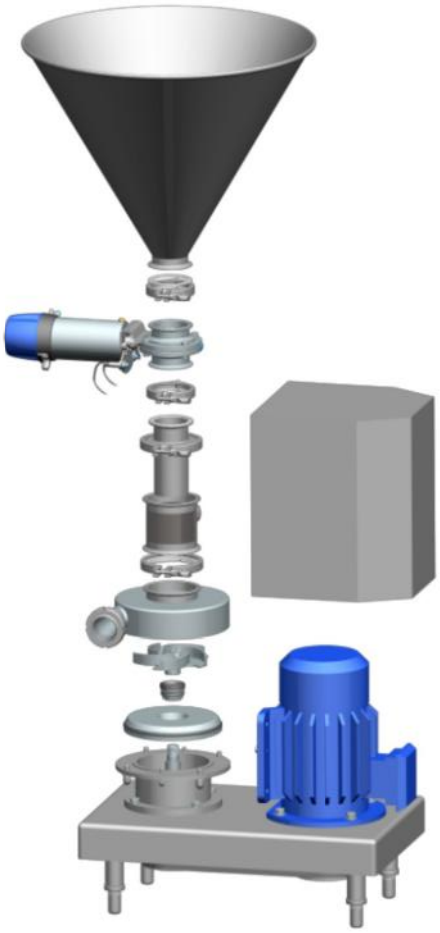

选项 Options

◆气动阀门
◆高-低水平传感器
◆气动或电动振动器

◆Pneumatic valve
◆High-and low-lelvel sensors
◆Vibrator(pneumatic or electric)

交换台 Switchboard

◆该混合器可配交换台，用于操作和保护机器
◆标准的交换台有以下基本的功能
◆停止/启动
◆紧急停止
◆电机保护

◆The mixers can be provided with a switchboard for operation and protection of the equipment
◆The basic functions of the standard switchboard are as following
◆Stop/start
◆Emergency stop
◆Motor protection

振动器类型 Types of vibrators

◆气动振动器：
该振动器是通过一个滚杠在钢槽上滚动制作而成的。
此振动器的频率是通过调整进入振动块的空气而改变的。

◆电动振动器：
电机集中位于旋转轴每个侧边的偏中心位置，以便于供应所需的振动。旋转生成离心力，该离心力可以通过改变质量而改变。

◆PNEUMATIC VIBRATOR:
The vibration is produced by means of a roller rolling on steel grooves.
The frequency of vibration is changed by regulating the entry of air into the vibratior.

◆ELECTRIC VIBRATOR:
The motor drives masses situated off-center on each side of the rotating shaft in order to provide the required Vibration.The rotating shaft generates centrifugal forces that can be modified by changing the masses.

WWW.CNDONJOY.COM

混合器(混合泵)
Blender(mixing pump))

固体探测传感器 Solid detection sensor

◆由于工序的高角度自动操作，非常重要的一点是，所有和工序相关的振动都要受控制。
◆为了该需要，我们可以提供在加料斗上加一个或两个探测传感器。
◆这个传感器供应的信号用于指示加料斗的高低位置。
◆低平的信号可以用于控制位于加料斗下部的阀门，以避免空气进入到混合室。
◆高平的传感器可以用来控制固体的供给单元。

◆Due to the high degree of automation of the processes,it is important that all the variables relevant to the process are controlled
◆In order to cover this need, we offer the possibility of adding one or two solid detection sevsors to the hopper.
◆These sensors provide a signal to indicate low and/or high level in the hopper.
◆The low level signal can be used to control the valve in the lower part of the hopper in order to avoid the entry of air into the mixing chamber.
◆The high level sensor can be used to control a solid feeding unit.

加料斗振动器 Hopper vibrator

◆我们可以提供安装一个振动器到加料斗上，便于固体的完全排出，比如非常精细的粉末。
◆振动器可保持固体的流动直到料斗完全清空为止，从而避免了残留物料附在加料斗的壁上。
◆如果需要更大的震动，就将混合调节到一个相应的状态下。
◆在加料斗和弹性联轴节上装一个防震动的支架。

◆We offer the option of installing a vibrator to the hopper to facilitate the complete discharge of the solids such as very fine powders.
◆The vibration allows keeping the flow of solids until the hopper is completely empty, thus avoiding residual materials from being left attached to the walls of the hopper.
◆If substantial vibration is required, the mixer will be adapted to operate under the relevant conditions.
◆This adaptation is made by means of an anti–vibration support for the hopper and an elastic coupling.

①料桶、粉末、固体、粘性液体等物料
Hopper,powder,solids,viscous liquid materials,etc.
②蝶阀，手动/气动或其他类型的阀门
Butterfly valve, manual/Pneumatic or other kinds of valves.
③混合物料出口 Mixture Outlet
④液体进口 Liquid inlet
⑤混合室 Mixing chamber

WWW.CNDONJOY.COM

物料混合泵(物料混合器)选型表 Mixing Pump(Blender)Selection table

型号 Model	流量(吨) Flow rate (m^3/h)	功率(kw) Power	固体进口 Solid inlet size	液体进口 liquid inlet size	出口 Outlet	加料斗容量 Hopper volume	固体吸入量 Solid suction volume	连接方式 Connection way
HHQ-10	10	3.0	DN65-3"	DN40-1.5"	DN50-2"	45L	2000kg/h	卡箍 螺纹Clamp;Thread
HHQ-20	20	4.0	DN65-3"	DN40-1.5"	DN50-2"	45L	3000kg/h	卡箍 螺纹Clamp;Thread
HHQ-30	30	5.5	DN80-35"	DN50-2"	DN65-2.5"	45L	4200kg/h	卡箍 螺纹Clamp;Thread
HHQ-40	40	7.5	DN80-35"	DN50-2"	DN65-2.5"	45L	5500kg/h	卡箍 螺纹Clamp;Thread
HHQ-50	50	11.0	DN100-4"	2.5"	DN80-3"	65L	7000kg/h	卡箍 螺纹Clamp;Thread
HHQ-60	60	15.0	DN100-4"	2.5"	DN80-3"	65L	9000kg/h	卡箍 螺纹Clamp;Thread

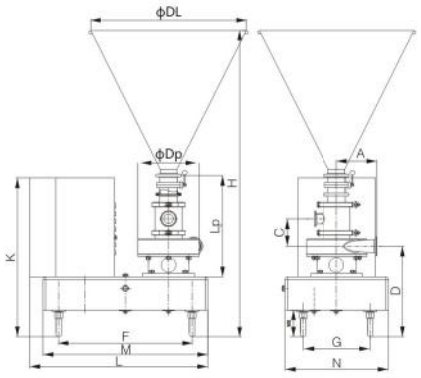

注意：
详细选型详见选型表；以下表格里的尺寸为参考值，
实际尺寸以实物为准。

Attention:
Please refer to selection table for details of next page,
The size in the following form is the reference value,
the actual size is subjected to actual object.

混合泵规格 Mixing Bump Dimension							外形安装尺寸Assembly Dimension											
系列 HHQ Series	功率 Power (kw)	固体进口 Iniet d"DN	液体进口 Iniet d"DN	出口 Outlet d"/DN	ϕP	Lp	A	B	C	D	F	G	H	K	L	M	N	DL
HHQ-10	3	3"/65	1.5"/40	2"/50	234	415	183	94	108	370	550	330	1117	620	670	630	400	600
HHQ-20	4	3"/65	1.5"/40	2"/50														
HHQ-30	5.5	3.5"/80	2"/50	2.5"/65	253	492	204	117	132	448	780	330	1339	817	920	870	420	610
HHQ-40	7.5	3.5"/80	2"/50	2.5"/65														
HHQ-50	11	4"/100	2.5"	3"/80	292	505	227	125	135	458	830	410	1359	870	970	920	500	700
HHQ-60	15	4"/100	2.5	3"/80														

物料混合泵型号说明 Model instruction of Mixing Pump

HHQ **10** **10t** **3kw** **380V** **50hz** **M** **D**

接口标准：DIN(D),SMS(S),3A(A),RJT(R),ISO/IDF(I)
Connection standard:DIN(D),SMS(S),3A(A),RJT(R),ISO/IDF(I)

连接方式：螺纹(M) 卡箍(C)
Connection way: threaded(M), Clamped(C)

电机频率：50HZ；60HZ
Motor frequency: 50HZ; 60HZ

电压：110V 220V 380V(详见选型表)
Voltage: 110V 220V 380V (refer to selection table)

电机功率：1.1kw 1.5kw 2.2kw.....
Motor power: 1.1kw 1.5kw 2.2kw.....

流量(详见选型表)
Flow rate (refer to selection table)

型号 Model

泵代码 Centrifugal Code

例：HHQ-10-10t-3kw-380V-50HZ-M-D
Sample: HHQ-10-10t-3kw-380V-50HZ-M-D

WWW.CNDONJOY.COM

CHINA DONJOY TECHNOLOGY CO.,LTD.

DONJOY looking forward to your visit! Your telecommunications!

WWW.CNDONJOY.COM

中国·东正
科技有限公司

地址: 温州空港经济技术开发区
温州滨海经济技术开发区
总机: 0577-86990888
传真: 0577-86998000

Add: Wenzhou airport economic and technological development zone Wenzhou binhai economic and technological development zone
Tel: +86-577-86990888
Fax: +86-577-86998000
E-mail: donjoy@cndonjoy.com

www.cndonjoy.com

法律声明:
目录样册版本属东正所有，如有抄袭东正将追究其法律责任和经济赔偿。
东正众多技术设计，都具有专利保护，如有抄袭，东正必将追究法律责任和经济赔偿。